Food Establishment Plan Review Manual

2016 Version

As recommended by the Conference for Food Protection, Plan Review Committee

TABLE OF CONTENTS

Preface 4
Introduction 4
Definitions 5
Contents and Format of Plans and Specifications 6
Menu Review and FOOD Flow 7
Menu and FOOD Processes 7
Preventative Tools for the FOOD Establishment 11
Facilities to Maintain Product Temperature 12
Refrigeration Storage Calculations 12
Walk-in Cooler/Freezer 13
Reach-in Refrigerators 14
Reach-in Freezers 14
Blast Chillers/Rapid Chill Units 14
Refrigerated Worktables 14
Refrigerated Processing Rooms 14
Display Storage Refrigerators 14
Customer Service Display Units/Cold Buffet Units 14
Ice Machines 15
General Cooking/Hot Holding 15
Stovetops and Grills 15
Ovens 15
Combi-Steamer 16
Rice Cooker/Warmer 16
Kettle 16
Rotisserie 16
Small Appliances 16
Fryers 16
Hot Tables 16
Customer Service Display Units/Hot Buffet Units 16
Equipment and Installation 17
Floor-Mounted Equipment 17
Counter-Mounted Equipment 18
Other 18
Ware washing Facilities 20
Manual Ware washing 20
Mechanical Ware washing 21
Plumbing 21
Water Supply 21
Hot Water Supply 22
Sewage Disposal Grease Interceptors/Traps 22
Backflow Prevention 22
Hygiene Facilities 23

Handwashing 23
Toilet Rooms 24
Storage 25
Dry Storage Calculations 26
Poisonous and Toxic Material Storage 26
Clean Equipment, Utensils and Linen Storage 26
Lighting 26
Intensity 26
Protective Light Shielding 27
Finishes 27
Floors 27
Walls 27
Ceiling 28
Coving 28
Pest Control 29
Building 30
Windows 30
Delivery, Customer and Toilet Room Doors 30
Insect Control Devices 31
Mechanical Ventilation 31
Mechanical Ventilation Requirements 31
Mechanical Hood Systems 31

Model Plan Review Application ..... Appendix A
Regulatory Compliance Review List ..... Appendix B
Model Calculations ..... Appendix C
Plan Review Web links ..... Appendix D

PREFACE

The FOOD Establishment Plan Review Manual was developed to assist the REGULATORY AUTHORITY and architects, FOOD consultants and other interested professionals in the plan review process when proposing to build or remodel a FOOD ESTABLISHMENT. However, it does not establish regulatory requirements and the recommendations contained herein are not intended to supplant, or otherwise serve as, the rules and regulations applicable to FOOD ESTABLISHMENTs in a given Federal, State, local, or tribal jurisdiction.

- This Manual is intended as a training tool for individuals responsible for conducting plan reviews and can be used in Food and Drug Administration (FDA)-sponsored training courses on Plan Review.
- Is intended to be consistent with the recommendations of the FDA as contained in the FDA 2013 Food Code. The FDA Food Code contains requirements for safeguarding public health and ensuring FOOD is unadulterated and honestly presented when offered to the consumer. Terminology with respect to the word "shall" is based on the recommendations within the FDA Food Code.
- Was developed by the Conference for Food Protection's 2014-2016 Plan Review Committee to update the 2008 Plan Review for Food Establishments Document.

INTRODUCTION

The plan review process presents a unique opportunity to discuss and prepare a proper foundation that will enable a FOOD ESTABLISHMENT to be successful, remain in compliance over time, and protect public health. Quality plan review, process improvement and the dedication to providing excellent customer service are high priorities for this Manual. Plan review assists in providing greater uniformity, technical assistance, and is essential for customer success and avoiding future establishment problems. Poor design, repair, and maintenance will compromise the functionality of the PHYSICAL FACILITIES and its operations. Plan review is intended to ensure PHYSICAL FACILITIES and proposed operational processes are properly designed and sanitary practices implemented in order to serve their intended purposes.

The plan review process provides the REGULATORY AUTHORITY with the opportunity to complete an effective evaluation of a FOOD ESTABLISHMENT's ability to ensure the following:

- Minimum standards are met for the protection of environmental health and safety of the public.
- Prevention of environmental health related illness and promote public health.
- Minimum standards are met for the sanitary design, facility layout, operational and product flow, menus, construction, operation and maintenance of regulated establishments, PREMISES, and surroundings.
- Food Code violations are eliminated prior to construction or implementation.
- Conditions are corrected and prevented that may adversely affect persons utilizing regulated establishments.

- Technical assistance is provided to industry to establish organized and efficient operations.
- Meets consumer expectations for the safe operation of a permitted FOOD ESTABLISHMENT.

No establishment is to be constructed and no major alteration or addition is to be made until detailed plans and specifications for such construction, alteration or addition have been submitted to and APPROVED by the REGULATORY AUTHORITY.

The REGULATORY AUTHORITY may impose specific requirements and provisions in addition to the requirements contained in codes that are authorized by law that are necessary to protect against public health hazards or nuisances. The REGULATORY AUTHORITY shall document the conditions that necessitate the imposition of additional requirements and the underlying public health rationale.

The function of plan review, construction inspections, pre-operational inspections, and the permit approval process is to provide a comprehensive overview of proposed operations with an emphasis on contents of plans, EQUIPMENT specifications, architectural design, and operational procedures. The end goal of the plan review process is to prevent foodborne illness resulting from poor sanitary facility design and/or floor plans, and, where applicable, when the process is based on menu, FOOD preparation, and FOOD product flow.

DEFINITIONS

The following definitions as used in this document are intended to assist in the understanding of this manual.

Definitions found within the FDA Food Code have been identified in CAPS within this document. A link to the FDA Food Code is included for your reference.
http://www.fda.gov/FOOD/GuidanceRegulation/RetailFOODProtection/FOODCode/ucm374275.htm

"Easily Disassembled Equipment" means EQUIPMENT that is accessible for cleaning and inspection by:

(1) Disassembling without the use of tools, or

(2) Disassembling with the use of handheld tools commonly available to maintenance and cleaning personnel such as screwdrivers, pliers, open-end wrenches, and Allen wrenches.

"Flashing" means an impervious sheet of material placed in construction to prevent water penetration or direct flow of water.

"Service Sink" means a curbed cleaning facility or janitorial sink used for the disposal of mop water and similar liquid wastes.

CONTENTS AND FORMAT OF PLANS AND SPECIFICATIONS

Proper plan review submittal with EQUIPMENT listed and located on floor plans as well as specifications for finish and plumbing schedules will highlight potential problems on paper while allowing for modifications to be made before costly purchases, installations, and construction are performed.

All facilities, systems, processes, and menus, when applicable, will be evaluated to determine minimum operational requirements. Refer to Appendix A for a copy of the Plan Review Application.

The following is a summary of what should be included in the plan submittal:

- Legible plans at minimum of 11 x 14 inches in size drawn to scale (scale - ¼ inch = 1 foot)
- Proposed menu, seating capacity, and projected daily meal volume for the FOOD ESTABLISHMENT.
- Provisions for adequate rapid cooling, including ice baths and refrigeration, and for hot and cold-holding of TIME/TEMPERATURE CONTROL for SAFETY (TCS) FOOD.
- Location of all FOOD EQUIPMENT. Each piece of EQUIPMENT must be clearly labeled, marked, or identified. Provide EQUIPMENT schedule that identifies the make and model numbers and listing of EQUIPMENT that is certified or classified for sanitation by an ANSI accredited certification program (when applicable). Elevation drawings may be requested by the REGULATORY AUTHORITY.
- Location of all required sinks: HANDWASHING SINKS, WAREWASHING sinks, Utility Sink and FOOD preparation sinks (if required).
- Auxiliary areas such as storage rooms, garbage rooms, toilets, basements and/or cellars used for storage or FOOD preparation.
- Entrances, exits, loading/unloading areas and delivery docks.
- Complete finish schedules for each room including floors, walls, ceilings and coved juncture bases.
- Plumbing schedule including location of floor drains, floor sinks, water supply lines, overhead waste-water lines, hot water generating EQUIPMENT with capacity and recovery rate, backflow prevention, and wastewater line connections.
- Location of lighting fixtures.
- Source of water and method of SEWAGE disposal.
- A color coded flow chart may be requested by the REGULATORY AUTHORITY demonstrating flow patterns for:
  - FOOD (receiving, storage, preparation, service);
  - UTENSILS (clean, soiled, cleaning, storage); and
  - REFUSE (service area, holding, storage, and disposal).
- Storage of Employee Personal Items.
- Ventilation.

MENU REVIEW AND FOOD FLOW

The menu review and the flow of FOOD through the FOOD ESTABLISHMENT are integral parts of the plan review process. The menu or a listing of all of the FOOD and beverage items to be offered at the FOOD ESTABLISHMENT must be submitted as part of the plan review application to the REGULATORY AUTHORITY.

As with the inspection process, the plan review process should focus on the FOOD and its flow through receipt, storage, preparation and service. The source and quantity of FOOD to be served should be reviewed along with the preparation and post-preparation operations. It is imperative to have knowledge of this information so that a proper assessment of the PHYSICAL FACILITIES can be made.

The food that flows through retail FOOD ESTABLISHMENT operations can be placed into the 3 following processes:

- **FOOD PROCESSES WITH NO COOK STEP**
  - **Receive – Store - Prepare – Hold – Serve**

  (Other processes may occur, but there is **NO cooking step**)
  - Examples: Salads, deli meats, cheeses, sashimi, raw oysters

- **FOOD PREPARATION FOR SAME DAY SERVICE**
  - **Receive – Store - Prepare - Cook – Hold – Serve**

  (Other processes may occur, including thawing)
  - Examples: Hamburgers, fried chicken, hot dogs

- **COMPLEX PROCESSES**
  - **Receive – Store - Prepare – Cook – Cool – Reheat – Hot Hold – Serve** (Other processes may occur, but the key is repeated trips through the temperature danger zone)
  - Examples: Refried beans, leftovers

Knowledge of how the FOOD is intended to flow through the FOOD ESTABLISHMNET is very useful since the CRITICAL CONTROL POINTS for each process remain the same regardless of the individual menu ingredients.

Special attention should be given to the review of complex FOOD processes which involve:

- Multiple ingredients being assembled or mixed
- TIME/TEMPERATURE CONTROL FOR SAFETY(TCS) FOODs
- FOODs which will be prepared or held for several hours prior to service
- FOODs requiring cooling and reheating
- Multiple step processing (passing through the Time Temperature Danger Zone,

135˚F - 41˚F more than once)

The process approach can be described as dividing the many flows in a FOOD ESTABLISHMENT into broad categories, analyzing the risks, and placing manager controls on each grouping of FOOD processes. These groupings will also impact the facility design; FOOD flow; and the numbers, types, function and placement of EQUIPMENT.

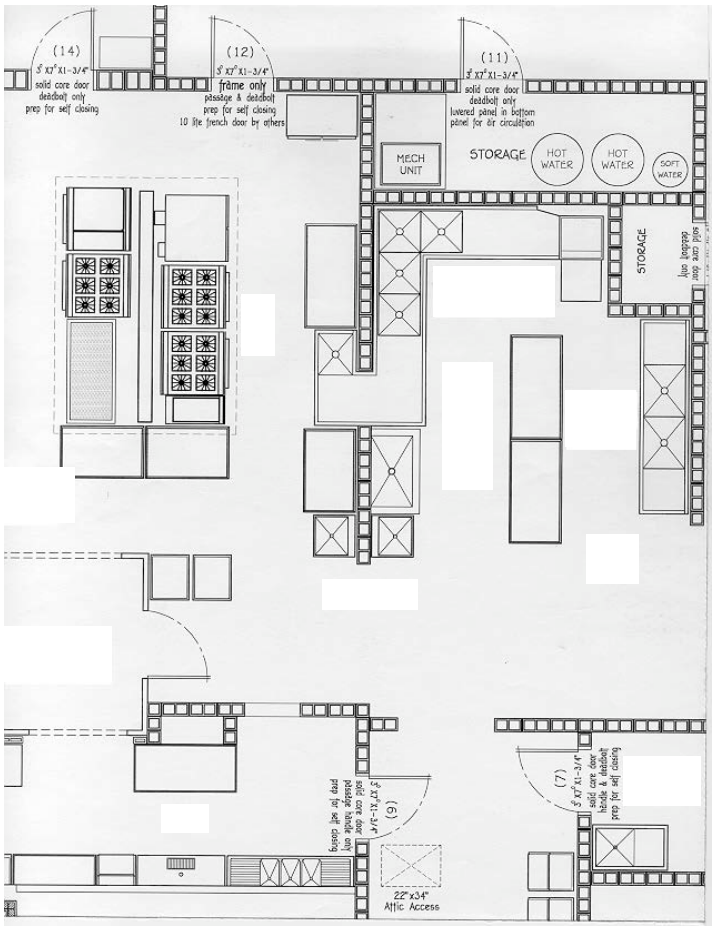

The drawing above is an example of a fixture plan submitted for plan review. It is a handy tool when following the FOOD process as described by the FOOD ESTABLISHMENT operator or their representative.

Layout, flow and menu (including FOOD preparation processes) should be major considerations to help facilitate an operator's Active Managerial Control (AMC) of the risk factors for foodborne illness. Strategic layout and placing of facilities and EQUIPMENT will separate different FOOD preparation processes, a major step towards preventing contamination of FOOD that may result from poor personal hygiene, contaminated EQUIPMENT, and improper holding temperatures. Adequate and convenient storage will also enhance operations.

The menu for a FOOD ESTABLISHMENT dictates the space and EQUIPMENT requirements for the safe preparation and service of various FOOD items. The menu will determine if the proposed receiving and delivery areas, storage area, preparation and handling areas, and thawing, cooking and reheating areas are available and adequate to handle the types and volumes of FOODs being prepared and served.

When reviewing the menu, it is important to evaluate the flow patterns for the preparation of the FOOD to be sure that the lay-out of the facility provides an adequate separation of raw ingredients from READY-TO-EAT FOODs, and that the traffic patterns are not crossing paths with waste items and other sources of contamination. Cross contamination can be minimized when the flow of FOOD is considered during plan review.

With a proper understanding of the menu and flow, the plans for FOOD ESTABLISHMENTS can be reviewed to help assure that the FOOD items being considered can be protected during all aspects of the FOOD operation.

FOOD Process and Steps Required

	Receive	Store	Prepare	Cook	Cool	Reheat	Hold	Service
NO COOK	X	X	X				X	X
SAME DAY SERVICE	X	X	X	X			X	X
COMPLEX PROCESSES	X	X	X	X	X	X	X	X

Anticipated EQUIPMENT needs

Receive	Store	Prepare	Cook	Cool	Reheat	Hold	Serve
Thermometer	**Dry Storage**	**Preparation Tables**	**EQUIPMENT**	**Preparation Sink**	**Fryers**	**Refrigerators**	**Cold Holding Facilities**
	Refrigerated Storage	**Cutting Boards**	**Fryer**	**Ice Bath**	**Oven**	**Ice**	**UTENSILs**
	Frozen Storage	**UTENSILs**	**Oven**	**Blast Chiller**	**Grills**	**Cold Holding**	**Hot Holding Facilities**
	Thermometer	**Hand wash Sinks**	**Broiler**	**Shallow Plans**	**Burners**	**Hot Holding**	
		Preparation Sinks	**Grill**	**Refrigerators**	**Griddle**	**FOOD Warmers**	
		Refrigerators	**Cook Top**	**Chill Sticks**	**Other**	**Thermometer**	
			Griddle	**Thermometer**	**Hand wash Sink**	**Hand wash Sinks**	
			Other	**Hand wash Sink**			
			Thermometer	**Preparation Table**			
			Hand wash Sink	**Other**			

PREVENTIVE TOOLS FOR THE FOOD ESTABLISHMENT

Active Managerial Control (AMC)

To effectively reduce the occurrence of foodborne illness risk factors, operators of FOOD ESTABLISHMENTs must focus their efforts on achieving active managerial control. The term "active managerial control" is used to describe industry's responsibility for developing and implementing FOOD safety management systems to prevent, eliminate, or reduce the occurrence of foodborne illness risk factors.

Elements of an effective FOOD safety management system may include the following:

- Certified FOOD protection managers who have shown a proficiency in required information by passing a test that is part of an accredited program
- Standard operating procedures (SOPs) for performing critical operational steps in a FOOD preparation process, such as cooling.
- Recipe cards that contain the specific steps for preparing a FOOD item and the FOOD safety critical limits, such as final cooking temperatures, that need to be monitored and verified.
- Purchase specifications

HACCP

Hazard Analysis and Critical Control Points (HACCP) plays a vital role in proper FOOD ESTABLISHMENT design. However, the risk management tool is not considered a “stand-alone” FOOD safety system. Design and construction are essential pre-requisites and must be put in place prior to the implementation and operation of effective FOOD production practices. The purpose of quality plan review is to ensure that FOOD ESTABLISHMENTs are safe, sanitary, and efficient. Proper design, construction, and HACCP principles work to achieve these purposes and minimize the aforementioned hazards.

Effective HACCP principles are essential to a successful FOOD ESTABLISHMENT and begin with the design and layout of the facility, monitoring the FOOD flow throughout the establishment, from delivery, storage, preparation, cooking, service and consumption. A well-designed progressive FOOD flow system will minimize cross-contamination and maximize efficiency in an establishment.

Good manufacturing policies or practices, standard operating procedures (SOPs), and documentation are essential to an establishment’s HACCP-based FOOD safety program and control over potential hazards. HACCP policies specifically address requirements set out in the FDA Food Code. Additional standards or good retail practices are required as foundation for FOOD safety and are detailed in the FDA Food Code. Examples include employee hygiene, employee restriction or exclusion, general sanitation, design, etc. HACCP/VARIANCE under the Plan Review & Construction Program is responsible for the review of HACCP procedures and VARIANCE applications in order for establishments to conduct specialized operations.

The FDA Food Code requires an APPROVED HACCP PLAN to be in place for some specialized processes not listed under §3-502.11. A formal HACCP PLAN review is required and needs to be APPROVED prior to conducting these operations. For information on creating a HACCP PLAN, contact the local regulatory plan reviewer or visit one of these informational hyperlinks: FDA Guidance to Implement HACCP Systems or USDAHACCPGuidelines.

FACILITIES TO MAINTAIN PRODUCT TEMPERATURE

Refrigerators and freezers are required to maintain TCS FOOD at or below 41°F and 0°F (frozen) respectively. It is recommended that refrigerators be maintained between 36°F and 38°F. All refrigeration units must have numerically scaled indicating thermometers accurate to ±3°F. Sufficient refrigeration and freezers shall be provided to support the intended menu. Consideration must be taken with the placement and installation of refrigeration units to allow for adequate ventilation. Air circulation within refrigeration and freezer units should not be obstructed and should allow for an even and consistent flow of cold air throughout the units

Refrigeration and freezer storage involves five major areas:

1. Storage for short-term holding of perishable and TCS FOOD.
2. Long-term storage.
3. Storage space for quick chilling of FOODs.
4. Space for assembling and processing of TCS FOOD.
5. Display storage for customer service.

If TCS foods are prepared a day or more in advance of service, a rapid cooling procedure capable of cooling TCS foods from 135°F to 41°F within 6 hours (135°F to 70°F within 2 hrs.) must be provided. The capacity of the rapid cooling facilities must be sufficient to accommodate the volume of food required to be cooled to 41°F within 6 hours. The location of the rapid cooling facilities (e.g., sinks for ice baths, freezer storage for ice wands, blast chillers) must be identified. Refrigerators and freezers at work stations for operations requiring preparation and handling of TCS foods should be considered. For example, it may be necessary to locate a freezer near the fryer where frozen products will be deep-fried. Refrigeration units, unless designed for such use, should not be located directly adjacent to cooking EQUIPMENT or other high heat producing EQUIPMENT which may adversely impact the cooling system's operation.

A. Refrigeration Storage Calculations

Calculating the amount of refrigeration and freezer space should be based on the menu and expected FOOD volume. The amount and location of refrigeration and freezer EQUIPMENT should complement the FOOD flow of the operation from receiving, storage and FOOD processing, to the point of service.

To plan refrigeration storage, the following items should be considered: menu, type of FOOD

operation, number of meals per day, number of deliveries per week, and adequate ventilation in the areas where the refrigeration systems will be located. When assessing the refrigeration needs, shelving space within the refrigeration and freezer units should be designed to prevent the cross-contamination of FOODs. Separating raw meats and poultry from ready-to-eat FOODs such as produce and prepared FOOD items. Thermometers must be conspicuously located in all units. Thermometer sensing elements should be located near the door

Formulas can be used to estimate refrigerated storage space. To calculate, you will need information on number of meals estimated to be served per day, days between deliveries and storage area availability. Links to example calculators can be found in Appendix C.

B. Walk-in Cooler/Freezer Units

Walk-in units should meet an ANSI accredited certification or equivalent, or deemed acceptable by the Regulatory Authority. A walk-in beverage or beer cooler is not recommended for FOOD storage. APPROVED flooring and integral cove bases need to be provided. Quarry tile, ceramic, and galvanized flooring are not recommended flooring materials for walk-in units. All gaps, cracks, penetrations, seams, and plug holes shall be SEALED SMOOTH and flush with the surface material.

Walk-in units should be installed when there is a need for long-term storage of perishable and TCS FOOD or when cooling space is needed for prepared and cooked FOODs. These coolers should be located near delivery or receiving areas. EASILY CLEANABLE curtain strips are recommended at walk-in doors. This not only helps in maintaining the temperature of the walk-in but also leads to an energy cost savings.

Exterior walk-in unit locations shall be properly designed for exterior installation and consideration given varied environmental concerns. Walk-in units should be designed with a roof, APPROVED overhead waterproof protection, and walkways shall be provided for the transportation of FOOD items. Walk-in units shall be APPROVED by the local building official and are evaluated and APPROVED on a case-by-case basis by the REGULATORY AUTHORITY.

If the walk-in floors will be water-flushed for cleaning or receive the discharge of liquid waste or excessive melt water, the floors should be sloped to drain. If the structure of the walk-in is integral with the building, properly installed floor drains may be installed inside the unit.

Each walk-in unit shall be equipped with lighting that provides 10 foot candles of light throughout the unit when it is full of product. Lights must be properly shielded or shatter resistant.

Condensate lines from walk-in units shall drain to APPROVED floor drains or alternative method APPROVED by the REGULATORY AUTHORITY. Without prior approval floor sinks or floor drain sinks shall not be installed in walk-in units. All walk-in units shall be properly

flashed off and SEALED to the ceiling and side walls. Walk-in units are not to be confused with refrigerated FOOD processing rooms. Refer to Item G-Refrigerated Processing Rooms.

C. Reach-in Refrigerators

These units are for short-term storage of perishable and TCS FOODs. These units should be considered to meet the daily storage demands of the kitchen operation. They are to be conveniently located at points of FOOD preparation and FOOD assembly. These units are not to be considered for the quick chilling of cooked and prepared FOODs.

D. Reach-in Freezers

Freezers are for long-term storage. They are not designed to be used as quick-chill units. These units should be located near delivery and DRY STORAGE AREAs.

E. Blast Chillers/Rapid Chill Units

These units are recommended for use when handling large volumes of FOOD that require quick chilling. A blast chiller is an efficient cooling mechanism for any amount of FOOD to be chilled, and where refrigeration cooling space is limited.

F. Refrigerated Worktables

These units are suggested when the menu includes assembling TCS FOODs. These units provide easy access of FOODs from the top of the unit. These units are not designed for long-term storage of FOOD or cooling.

G. Refrigerated Processing Rooms

These areas (e.g. meat cutting rooms) should be considered when there is extensive handling of cold TCS FOOD. APPROVED hand sinks should be located in these areas.

H. Display Storage Refrigerators

These units are designed to display TCS FOOD under refrigeration. Examples of these units are deli display, fresh fish, and meat and poultry cases.

I. Customer Service Display Units/ Cold Buffet Units

These units are designed for holding FOOD under refrigeration for customer access. They are designed for short-term display and are not designed for the cooling of FOOD. Beverage display coolers are not APPROVED for storing open TCS FOODs.

Cold buffets and salad bars are designed for short-term display. They should be mechanically refrigerated, and have APPROVED sneeze guards with side panel protection.

J. Ice Machines

If ice is to be used as a cooling medium for FOOD and beverage items the unit should be adequately designed and sized to meet all operational needs in an APPROVED location. Ice machines designed for outdoor dispensing will need National Automatic Merchandising Association (NAMA) certification

K. General Cooking and Hot Holding

Cooking and hot holding units are designed to heat FOOD to a required temperature within a required amount of time for FOOD safety. Cooking and reheating temperatures have been determined using scientific analysis. The time and temperature requirements are based on the pathogens that are likely to be present on the product. It is recommended that the units are commercial grade and meet NSF/ANSI standards. Consideration must be taken with the placement and installation of cooking/reheating/hot holding EQUIPMENT to ensure that proper ventilation and sanitation can occur. Construction of these units should be durable and EASILY CLEANABLE

NOTE: The commercial appliances described in this section are placed under a vent hood to evacuate grease, steam, and fumes, which could pose a potential fire or health risk. Refer to the topic on Ventilation of this Manual or your REGULATORY AUTHORITY for specific requirements.

Units used to heat FOOD are divided into two categories:

1. Cooking/Reheating
2. Hot Holding

All units in use must be able to meet the minimum required heated temperatures outlined in the FDA Food Code, Chapter 3-4 Destruction of Organisms of Public Health Concern. http://www.fda.gov/FOOD/GuidanceRegulation/RetailFOODProtection/FOODCode/default.htm

L. Stovetops and Grills

Gas, electric, or wood-burning stoves are used to cook and reheat product in pots or pans. A grill is similar to a stove with the ability to place the FOOD directly over the flame.

M. Ovens

Ovens are thermally insulated chambers used for cooking or reheating FOODs. They can be gas, electric, or wood-burning units.

N. Combination Oven/Steamer (Combi Oven)

A Combi oven/steamer is similar to a convection oven with the ability to produce dry heat, moist heat, or a combination of the two.

O. Rice Cooker/Warmer

The unit is an electric appliance that is capable of cooking rice and then hot holding the rice at 135°F or above. Scoops or ladles for serving may be stored in a running dipper well.

P. Kettle

Kettles are cooking pots used to boil large quantities of FOOD products. The units are generally clean-in-place and should have the necessary tools for sanitation. Adequate floor drains must be present for disposal of spent water.

Q. Rotisserie

Rotisseries are self-contained units that include a heat source and racks for skewers or spits. Beef, pork, or poultry is rotated over the fire to cook the FOOD to the required temperature.

R. Small Appliances

Small appliances (table top) include microwaves, Panini press, broilers, and toasters. These units are used to heat FOOD to the required cook or reheat temperature depending on the application.

S. Fryers

Fryers are cooking devices that use oil heated to a high temperature. The hot oil has a flash point that can result in a fire. Follow the manufacturer's instructions for operation, maintenance and cleaning to prevent a fire incident.

T. Hot Tables

Hot tables are gas or electrically heated units that are design to maintain temperature. They should never be used to cook or reheat TCS FOODs. The design should allow for disassembly and deep cleaning of interior surfaces. These units must be able to maintain a minimum temperature of 135°F.

U. Customer Service Display Units/Hot Buffet Units

These are gas or electrically heated units that are designed to maintain temperature. They should never be used to cook or reheat TCS FOODs. They should be constructed of durable and EASILY CLEANABLE materials. The design should allow for disassembly and deep cleaning of interior surfaces. The design should protect FOOD from contamination that could occur from the environment or customers by using sneeze shields or covers. The units must be able to maintain a minimum temperature of 135°F

EQUIPMENT AND INSTALLATION

All EQUIPMENT in a FOOD ESTABLISHMENT must comply with the design and construction standards contained in Chapter 4 of the FDA Food Code. FOOD EQUIPMENT that is certified or classified for sanitation by an ANSI accredited program is deemed to comply with Parts 4-1 and 4-2 of the FDA Food Code.

EQUIPMENT including ice makers and ice storage EQUIPMENT, shall not be located under exposed or unprotected sewer lines, open stairwells or other sources of contamination.

The following EQUIPMENT installation recommendations will help ensure proper spacing and sealing allowing for adequate and easy cleaning.

A. Floor-Mounted Equipment

EQUIPMENT should be mounted on APPROVED lockable casters, gliders or wheels to facilitate easy moving, cleaning, and flexibility of operation whenever possible. Moveable EQUIPMENT requiring utility services such as gas or electrical connections should be provided with easily accessible quick-disconnects or the utility service lines should be flexible and of sufficient length to permit moving the EQUIPMENT for cleaning. If a flexible utility line is used, a safety chain that is shorter than the utility line must be installed. Check with local fire safety and building codes to ensure that such installations are acceptable.

Floor-mounted EQUIPMENT that is not mounted on wheels or casters with the above utility connections should be:

1. Permanently SEALED to the floor around the entire perimeter of the EQUIPMENT. The sealing compound should be pliable and non-shrinking. It should retain its elasticity and provide a water- and vermin-tight joint; or
2. Installed on a solid, SMOOTH, non-absorbent masonry base. Masonry bases and curbs should have a minimum height of 2" and be coved at the junction of the platform and the floor with at least a 1/4" radius. The EQUIPMENT should overhang the base by at least 1" but not more than 4". Spaces between the masonry base and the EQUIPMENT must be SEALED as above; or
3. Elevated on legs to provide at least a 6" clearance between the floor and EQUIPMENT. The legs shall contain no hollow open ends.
4. For EQUIPMENT not readily moveable by one person, spacing between and behind EQUIPMENT must be sufficient to permit cleaning under and around the unit. EQUIPMENT shall be spaced to allow access for cleaning along the sides, behind and above. At least 6" of clear, unobstructed space under each piece of EQUIPMENT must be provided or EQUIPMENT must be SEALED to the floor.
5. If EQUIPMENT is against a wall and is not movable, the EQUIPMENT must be joined to and/or SEALED to the wall in a manner to prevent liquid waste, dust and debris from collecting between the wall and the EQUIPMENT.
6. When EQUIPMENT is joined together, or spreader plates are used between

EQUIPMENT, the resultant joint must be SEALED to prevent liquid waste, dust and debris from collecting between the EQUIPMENT.

Unobstructed and functional aisle and working spaces must be provided. A minimum width of 36" is required by fire and building codes.

All utility and service lines and openings through the floor and walls must be adequately SEALED. Penetrations through walls and floors must be minimized. Exposed vertical and horizontal pipes and lines must be kept to a minimum. The installation of exposed horizontal utility lines and pipes on the floor is prohibited. Any insulation materials used on utility pipes or lines in the FOOD preparation or dishwashing areas must be SMOOTH, non-absorbent, and easy to clean. Electrical units which are installed in areas subject to splash from necessary cleaning operations or FOOD preparation should be water-tight and washable.

B. Counter-Mounted Equipment

COUNTER-MOUNTED EQUIPMENT is defined as EQUIPMENT that is not portable and is designed to be mounted off the floor on a table, counter, or shelf. All COUNTER-MOUNTED EQUIPMENT shall be:

- SEALED to the table or counter; or
- Elevated on APPROVED legs to provide at least a 4" clearance between the table or counter and the EQUIPMENT to facilitate cleaning.

C. Other

EQUIPMENT that is open underneath, such as drain boards, dish tables, and other tables that are not moveable should be spaced to allow for ease of cleaning or should be SEALED to the wall.

Non-FOOD contact surfaces of EQUIPMENT that are exposed to splash, spillage, or other FOOD soiling or that require frequent cleaning shall be constructed of corrosion-resistant, non-absorbent, and SMOOTH material.

Legs of all EQUIPMENT should not have hollow, open ends.

If running water dipper wells are installed, methods for filling and draining the units must be identified.

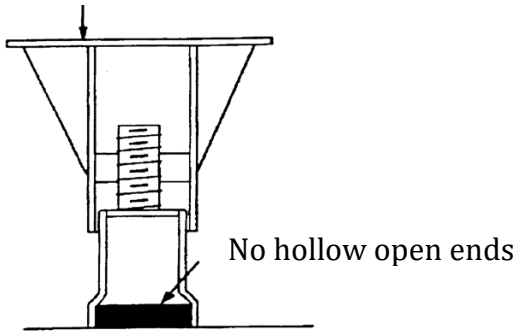

Elevate equipment for effective cleaning.

Sanitary Leg Example

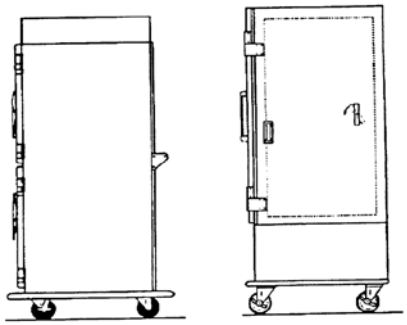

Mobile Kitchen equipment mounted on Castor

Holding Cabinet & a Reach-in Refrigerator

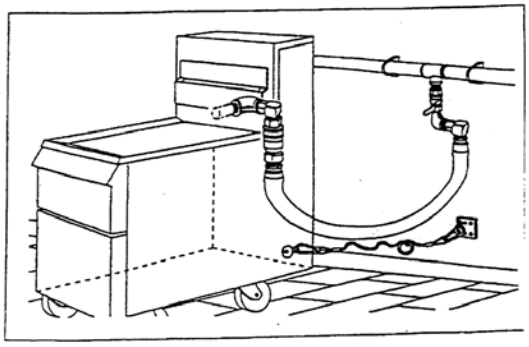

Refer to your Local Regulatory Authority for Gas Code Requirements

Flexible Gas Connection with Safety Chain

Equipment Spacing

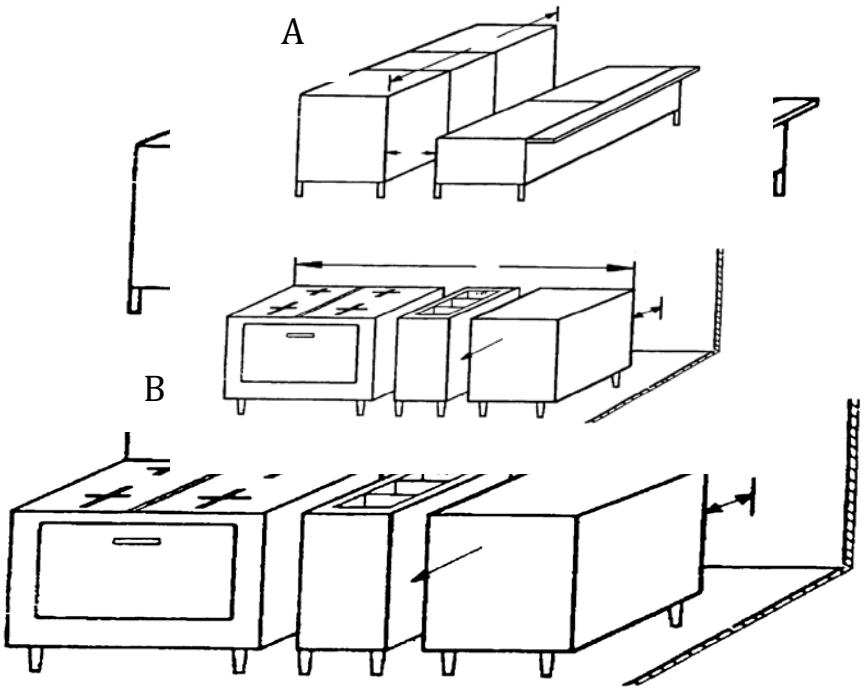

Recommended EQUIPMENT spacing; provided access is available from both ends:

EQUIPMENT Length (A)	Space From Walls and Adjacent EQUIPMENT (B)
4' or less	6"
4' - 8'	12"
8' or more	18

WAREWASHING FACILITIES

The minimum requirement for WAREWASHING in a FOOD ESTABLISHMENT is a three-compartment sink. A mechanical WAREWASHING machine may be installed in addition to the three-compartment sink.

A. Manual Ware washing

For manual WAREWASHING, a stainless steel sink with no fewer than three compartments must be provided, with the exception that a two-compartment sink may be allowed by the REGULATORY AUTHORITY under certain conditions.

- The sink compartments shall be large enough to completely immerse the largest pot, pan or piece of EQUIPMENT to be used in the establishment that will not be cleaned in-place.
- Each compartment shall be supplied with adequate hot and cold potable running water, temperature of the wash solution shall be maintained at not less than 110°F, or the temperature specified on the cleaning agent manufacturer's label instructions.
- Drain boards, UTENSIL racks or tables large enough to accommodate clean and soiled UTENSILs shall be provided. The drain boards shall be self-draining.
- Adequate facilities for pre-flushing or pre-scrapping EQUIPMENT and UTENSILs must be provided.
- If hot water is used to sanitize EQUIPMENT and UTENSILs, the means for heating the water to 171°F in the 3rd compartment must be identified. The racks for the immersion of EQUIPMENT and UTENSIL must be specified.

B. Mechanical Ware washing

WAREWASHING machines shall be installed in accordance with the manufacturer's recommendations and applicable code requirements. If used, the hot water booster for WAREWASHING machines must be identified during plan review.

Adequate facilities shall be provided to air dry washed EQUIPMENT and UTENSILs. Drain boards, UTENSIL racks or tables must be large enough to allow proper and sufficient air drying of EQUIPMENT and UTENSILs.

Storage facilities shall be provided to store cleaned and sanitized UTENSILs and EQUIPMENT at least 6" above the floor; protected from splash, dust, overhead plumbing or other contamination. The plan must specify the location and facilities used for storing all UTENSILs and EQUIPMENT.

PLUMBING

A. Water Supply

The primary concerns relative to the water supply in a FOOD ESTABLISHMENT are:
1. Ensure the facility is supplied with a safe and adequate water supply, including adequate supply of hot water; and
2. Verify that the water can remain safe while it is in the facility.

Safe Source: Start at the water source. Determine if the water is potable or non-potable. The availability of an APPROVED public water supply must be verified. Any use of a non-public water source (well water) shall comply with local, state, and/or federal laws, and construction and testing standards.

Sufficient potable water: Potable water shall be provided from a source constructed and

operated according to law that meets the peak water demands of the FOOD ESTABLISHMENT.

B. Hot Water Supply:

The hot water supply shall be sufficient to satisfy peak hot water demands of the FOOD ESTABLISHMENT. Hot water for hand washing and most FOOD ESTABLISHMENT uses shall be at least 100°F. Hot water for mechanical WAREWASHING must be boosted up to 150°F-165°F for washing and 165°F-180°F for sanitizing or according to the manufacturer's data plate on the machine. The temperature of the wash solution for spray-type ware washers that use chemicals to sanitize may not be less than 120°F.
The temperature of the wash solution for manual WAREWASHING must be maintained to not be less than 110°F. The water temperature for manual hot water sanitization must be at least 171°F.

Tank less water heaters shall be installed and used in accordance with the manufacturer's recommendations.

For guidance on calculating Hot Water Requirements see Appendix C – Model Calculations

C. Sewage Disposal, Grease Interceptors/Traps

All SEWAGE including liquid waste shall be disposed into a public SEWAGE system or an individual SEWAGE disposal system constructed and operated according to law. Where individual SEWAGE disposal systems are utilized, the location shall be noted on the plans and certification of compliance with state and local regulations shall be provided.

A grease trap/interceptor is a chamber designed for wastewater to pass through and allow any grease to float to the top for retention as the remainder of the wastewater passes through. If used, a grease trap shall be located to be easily accessible for cleaning; FOOD solids entering the grease trap/interceptor should be minimized.

It is recommended that waste water from fixtures or drains which would allow fats, oils, and grease to be discharged be directed to a grease trap/interceptor. Local municipalities/jurisdictions will determine the number and size of grease traps, grease interceptors or catch basins. If installed, grease traps shall be properly spaced so they are easily accessible for servicing and cleaning. Refer to the local municipality/jurisdiction for the installation requirements.

D. Backflow Protection

Plumbing shall be sized and installed according to applicable codes. There shall be no cross connections between the potable water supply and any non-potable system or a system of unknown quality. Where non-potable water systems are permitted for purposes such as air conditioning and fire protection, the non-potable water must not contact directly or

indirectly: FOOD, potable water or EQUIPMENT that contacts FOOD or UTENSILs. The piping of any non-potable water system shall be durably identified so that it is readily distinguishable from piping that carries potable water.

A connection to a sewer line may be direct or indirect. A direct connection may not exist between the sewerage system and any drains originating from EQUIPMENT in which FOOD, portable EQUIPMENT, or UTENSILs are placed, except if otherwise required by law. When a WAREWASHING machine is located within 5 feet of a trapped floor drain, the dishwasher waste outlet may be connected directly on the inlet side of a properly vented floor drain trap.

An **indirect connection** may be one of two types, air gap or air break:

1. For a potable water supply, an **air gap** means the unobstructed, vertical air space that separates a potable system from a non-potable system.

2. An **air break** is a waste line from a fixture that discharges used water or liquid waste to a drain where the waist line terminates below flood level.

AIR GAP AIR BREAK

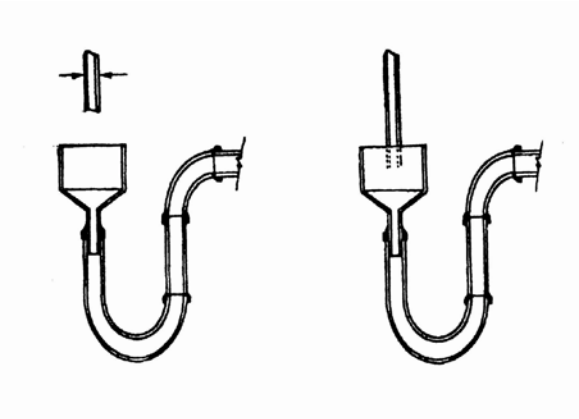

A connection to a sewer line may be direct or indirect. A direct connection may not exist between the sewerage system and any drains originating from EQUIPMENT in which FOOD, portable EQUIPMENT, or UTENSILs are placed, except if otherwise required by law. When a WAREWASHING machine is located within 5 feet of a trapped floor drain, the dishwasher waste outlet may be connected directly on the inlet side of a properly vented floor drain.

HYGIENE FACILITIES

A. Handwashing

Handwashing is a critical factor to prevent contamination of FOODs. Proper handwashing reduces the amount of pathogens that can be transmitted via cross contamination from raw

FOODs to READY-TO-EAT-FOODS. It is imperative to have adequate numbers and conveniently placed HANDWASHING SINKS to ensure employees are washing hands. It is important that handwashing be done only at properly equipped HANDWASHING SINKS to help ensure that employees effectively clean their hands and minimize contamination of FOOD and FOOD-CONTACT SURFACES.

A HANDWASHING SINK, hand drying device or disposable towels, hand cleanser and waste receptacle shall be located for convenient use by employees who work in FOOD preparation, FOOD dispensing, and WAREWASHING areas.

Nothing must block the approach to a HANDWASHING SINK.

HANDWASHING SINKS must also be located in or immediately adjacent to toilet rooms.

HANDWASHING SINKS shall be of sufficient number and conveniently located for use by all employees in FOOD preparation, FOOD dispensing, and WAREWASHING areas.

HANDWASHING SINKS shall be easily accessible and may not be used for purposes other than handwashing. Sinks used for FOOD preparation, washing EQUIPMENT or UTENSILs, or service (mop) sinks shall not be used for handwashing.

Each handwashing sink shall be provided with hot and cold water tempered by means of a mixing valve or a combination faucet to provide water at a temperature of at least 100˚F. If used, self-closing, slow-closing or metering faucets shall be designed to provide a flow of water for at least 15 seconds without the need to reactivate the faucet.

Splash from use of a handwashing sink may not contaminate FOOD, FOOD-CONTACT SURFACES, clean EQUIPMENT or UTENSILs. A washable baffle or barrier may be needed if the handwashing sink is located next to a FOOD preparation area, UTENSIL or EQUIPMENT storage, or FOOD-CONTACT SURFACE and if the space between the handwashing sink and FOOD, FOOD preparation, FOOD-CONTACT SURFACES, and clean UTENSILs and EQUIPMENT does not provide adequate protection.

Similarly, the location of soap and paper towel dispensers at HANDWASHING SINKS must be reviewed during plan review so that their use does not contaminate FOOD, FOOD-CONTACT SURFACES, UTENSILs and EQUIPMENT. In addition, the distance that employees would have to reach the faucet handles, soap and paper towels must be reviewed during plan review to assure that they will have proper access to the HANDWASHING SINKS and will not have to reach across dirty surfaces while washing their hands.

B. Toilet Rooms

Properly functioning toilet facilities must be accessible to employees at all times.

If required by federal, state, local or tribal laws and regulations, toilet facilities must be made available to the customers. If the public toilet facilities are used by employees,

separate toilet facilities may not have to be installed for the employees. Toilet facilities must be made accessible in accordance with the Americans with Disabilities Act (ADA) of 1990.

The floors, walls, and ceiling in toilet rooms shall be SMOOTH and EASILY CLEANABLE. The walls around toilets, urinals, toilet paper dispensers, soap dispensers, and paper towel dispensers should be water resistant and durable for frequent cleaning.

The minimum requirements for toilet facilities shall include:

- **Toilet:** At least one toilet and not fewer than the number of toilets required by law shall be provided. If authorized by law, urinals may be substituted for additional toilets in men's toilet rooms.
- **HANDWASHING SINK:** Each HANDWASHING SINK shall be provided with hot and cold water tempered by means of a mixing valve or a combination faucet to provide water at a temperature of at least 100˚F. If used, self-closing, slow-closing or metering faucets shall be designed to provide a flow of water for at least 15 seconds without the need to reactivate the faucet.
- **Handwashing cleanser:** Each HANDWASHING SINK or group of two adjacent HANDWASHING SINKS shall be provided with hand cleaning liquid, powder, foam or bar soap. A dispenser shall be provided for handwashing cleanser provided in liquid or powder form.
- **Hand drying facility:** Each HANDWASHING SINK or group of adjacent HANDWASHING SINKS shall be provided with individual, disposable towels; a continuous towel system that supplies the user with a clean towel; heated-air hand drying device; or hand drying device with air-knife, high velocity air at ambient temperatures.
- **Toilet paper:** A supply of toilet paper shall be provided in a dispenser at each toilet.
- **Waste receptacle:** If disposable towels are used, a waste receptacle shall be located at each sink or group of sinks. At least one covered waste receptacle shall be provided in toilet rooms used by females.
- **Ventilation:** Toilet rooms must be vented to the outside. Mechanical Ventilation shall be installed in toilet rooms according to law. If allowed by law, operable screened windows may be used in lieu of mechanical ventilation devices.
- **Toilet room doors:** Toilet room doors shall be tight-fitting and self-closing.
- **Lighting:** At least 215 lux (20 foot candles) shall be provided in toilet rooms.

STORAGE

A. Dry Storage-

The dry storage space needed depends on the menu, number of meals served between deliveries, frequency of deliveries, and the amount and type of SINGLE-SERVICE ARTICLES to be stored. The location of dry storage should be adjacent to the FOOD preparation area and convenient to receiving. Adequate ventilation should be provided. FOOD should not be

stored under exposed sewer lines. Similarly, a cabinet that is used for the storage of FOOD, shall not be located under exposed or unprotected sewer lines, open stairwells or other sources of contamination. Stationary shelving needs to have a minimum 6" floor clearance.

Shelving, dollies, racks, pallets and skids shall be corrosion-resistant, non- absorbent and SMOOTH. Pallets, racks and skids used for bulk cased or overwrapped items shall be designed to be moved by hand or by conveniently located hand trucks or forklifts. Shelving, dollies, racks, pallets and skids should be spaced away from walls to allow for cleaning and pest monitoring/inspection.

APPROVED FOOD containers with tight-fitting covers and dollies should be used for storing bulk FOODs such as flour, cornmeal, sugar, dried beans, rice and similar.

B. Dry Storage Calculations

Formulas can be used to estimate the amount of dry storage space that may be needed. To determine, you will need information on number of meals estimated to be served per day, days between deliveries and storage area availability. Links to example calculators can be found in Appendix C.

C. Poisonous or Toxic Materials Storage

Designate an area for POISONOUS OR TOXIC MATERIAL storage that is away from FOOD and clean UTENSILs. These include detergents, sanitizers, related cleaning or drying agents and caustics, acids, polishes and other chemicals. Install cabinets, cages, or physically separate shelves for storing chemicals.

D. Clean Equipment, Utensil and Linen Storage

Designate areas for clean cooking UTENSILs, cutting boards, glassware and dishware. Store them at least 6-inches off the floor in a clean, dry location where they will be protected from dust and splash.

LIGHTING

A. Intensity

The light intensity shall be at least 108 lux (10 foot candles) at a distance of 75 cm (30 inches) above the floor, in walk-in refrigeration units and dry FOOD storage areas and rooms during periods of cleaning.

The light intensity shall be at least 215 lux (20 foot candles) at a surface FOOD is provided for consumer self-service such as buffets and salad bars or where fresh product or packaged FOODS are sold or offered for consumption; inside EQUIPMENT such as reach-in

and under-counter refrigerators; at a distance of 75 cm (30 inches) above the floor in areas used for handwashing, WAREWASHING, and UTENSIL storage, and in toilet rooms.

The light intensity shall be at least 540 lux (50 foot candles) at a surface where a FOOD EMPLOYEE is working with FOOD or working with UTENSILs or EQUIPMENT such as knives, slicers, grinders, or saws where employee safety is a factor.

B. Protective Light Shielding

Shielding such as plastic shields, plastic sleeves with end caps, shatterproof bulbs and/or other APPROVED devices shall be provided for all artificial lighting fixtures located in areas where there is exposed FOOD; clean EQUIPMENT, UTENSILs, and LINENS; or unwrapped single-service and single-use articles.

Heat lamps shall be protected against breakage by a shield surrounding and extending beyond the bulb, leaving only the face of the bulb exposed.

FINISHES

A. Floors

Example floor materials are as follows:

- Quarry tile, ceramic tile
- SEALED curbed concrete
- Seamless poured epoxy minimum 3/16-inch thick.
- Commercial-grade sheet vinyl **(no felt backing)**
- Commercial-grade vinyl composition tile (VCT)

Pre-approval from the REGULATORY AUTHORITY should be obtained prior to use of carpet and/or wood.

B. Walls

Example wall materials are as follows:

- Stainless steel
- Ceramic tile
- Aluminum
- Fiber-glassed reinforced panels (FRP)
- SEALED Concrete blocks or bricks
- Epoxy or glazed drywall

C. Ceilings

Example ceiling materials may include wall finish material listed above along with the following:

- EASILY CLEANABLE, non-absorbent ceiling tiles
- Painted drywall

D. Coving

Coving is the floor material found at the base of walls (wall/floor junctures) and is required in most areas of the FOOD ESTABLISHMENT, such as:
FOOD preparation, storage, handling, and packaging areas

- UTENSIL washing and storage areas
- Interior waste disposal areas (garbage, REFUSE, grease)
- Restrooms
- Hand washing areas
- Janitorial facilities
- Walk-in refrigerator and freezer units (inside and outside)
- Bars (employee side)
- Customer self-serve areas where non-individually prepackaged FOODs or beverages are sold or dispensed (e.g., salad bars, buffets, bulk FOOD sales, beverage stations)
- Employee change and storage areas
- Wait stations

Coved flooring material should extend integrally up the walls. Integral coving is not required in areas used exclusively for dining, point-of-sale, or the storage of UTENSILs or FOODs contained in the original **un-opened** container

Floor Installation Diagrams

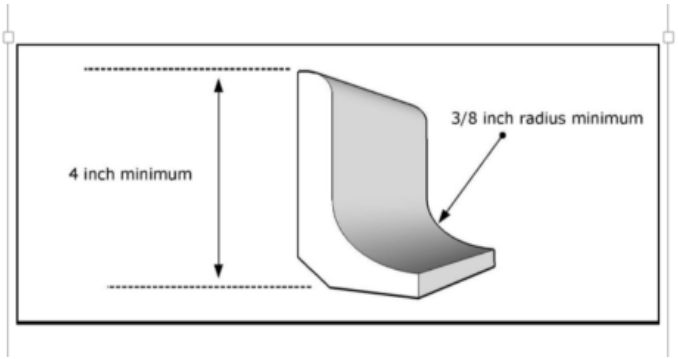

Example of quarry tile cove base.

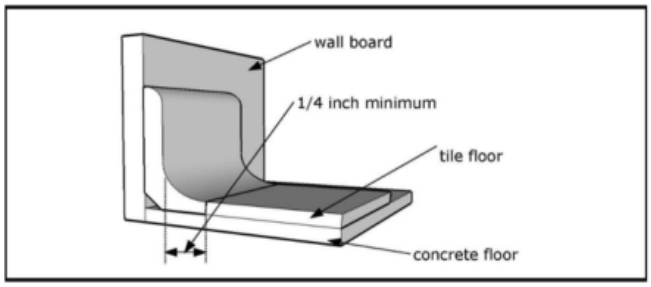

Example of quarry tile cove base flush with floor.

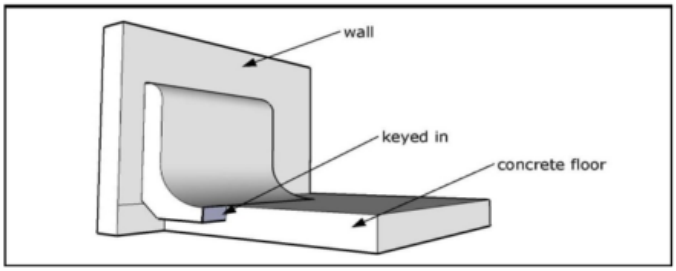

Example of quarry tile cove base integral to concrete floor.

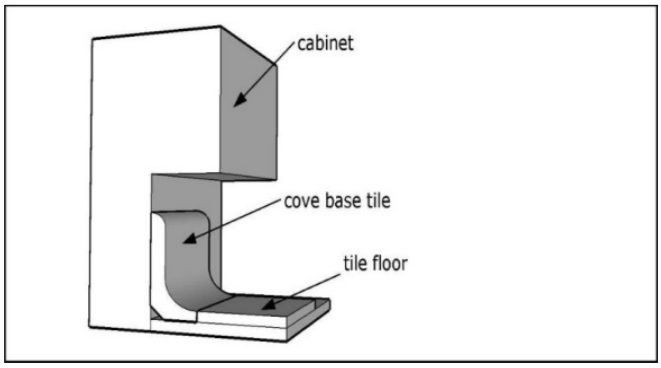

Example cove base; cabinet toe-kick

PEST CONTROL

All openings to the outside shall be effectively protected against the entrance of insects and rodents. All roller doors, sliding or bi-fold doors, or similar movable wall systems that are not self- closing and create a continuous opening to the exterior must have an effective means of pest control.

Some examples of effective barriers include:

- Solid, tight fitting, self-closing doors.
- Fixed or self-closing screens of #16 mesh or finer.
- Effective air curtains.

Example Air Curtain

This may not apply if a FOOD ESTABLISHMENT opens into a larger completely enclosed structure such as a coliseum, arena, warehouse, shopping mall, superstores, airport, or office building, where the outer openings from the larger structure are protected against the entry of insects and rodents.

A. Building

All masonry or cement foundations must be rodent proof. Seal all openings into the foundation and exterior walls, including openings & penetrations around wall and ceiling penetrations.

Cover all building vents with a minimum #16 mesh screen. Effectively seal all air ducts, skylight, transoms, and other openings to the outside.

B. Windows

Windows that open to the outside must be properly protected with minimum #16 mesh screen, with the exception of service windows.
Drive-thru and walk-up service windows must have effective means to prevent pest entry, to include minimum #16 mesh screens, properly designed and installed air curtains, or other effective means such as self-closing devices (spring-loaded, bump pad, electronic opener, or gravity operated).

C. Delivery, Customer, and Toilet Room Doors

Exterior doors: All outside doors shall be self-closing and tight fitting. Install a door sweep and weather stripping to prevent the entrance of insects and rodents. *Note: Daylight shall not be visible around the perimeter of the door.*

Garage Doors, Roller Doors, and Loading Docks: Garage and roller type delivery doors must be protected against pests. Loading docks shall have properly installed tight fitting dock seals at all loading bays. If the location of one of these doors exposes the kitchen or other FOOD service, air curtains will be required.

Toilet Room (Restroom) doors: All toilet rooms located in or adjacent to a FOOD ESTABLISHMENT shall be provided with tight fitting, self-closing doors. This requirement does not apply to a toilet room that is located outside a FOOD ESTABLISHMENT and does not open directly into the FOOD ESTABLISHMENT such as a toilet room that is provided by the management of a shopping mall.

D. Insect Control Devices, Design and Installation

Insect control devices that are used to electrocute or stun flying insects shall be designed to retain the insect within the device. These devices must not be located above FOOD preparation areas and installed to prevent the contamination of exposed FOOD, clean EQUIPMENT, UTENSILs, and LINENS, from insect fragments

MECHANICAL VENTILATION

A. Mechanical Ventilation Requirements

Commercial cooking or display EQUIPMENT, which produces smoke, steam, grease, mists, particulate matter, condensation, vapors, fumes, odors, or create sanitation or indoor air quality problems, will require a hood.

Hoods shall be designed and installed to prevent grease and condensation from collecting on walls, ceilings, and dripping into FOOD or onto FOOD contact surfaces. All hoods should comply with the current International Mechanical Code (IMC) and/or all local building and fire safety codes.

Balancing of the exhaust and make-up air must be ensured so that the system can be operated efficiently.

B. Mechanical Ventilation Hood Systems

Type I hoods are required over EQUIPMENT that produce grease, smoke, excessive steam, heat, condensation, particulate matter, odors, or create indoor sanitation or indoor quality problems. Examples of equipment requiring installation under a hood include: Kettles, pasta cookers, hot plates, salamanders, Mongolian-style grills, gas cooking EQUIPMENT, tableside cooking EQUIPMENT, such as Teppanyaki-style cooking, Tandoori ovens, rotisserie units, Panini grills, etc.

Type I Hood over Cook Line

Grease filters

Fire suppression system

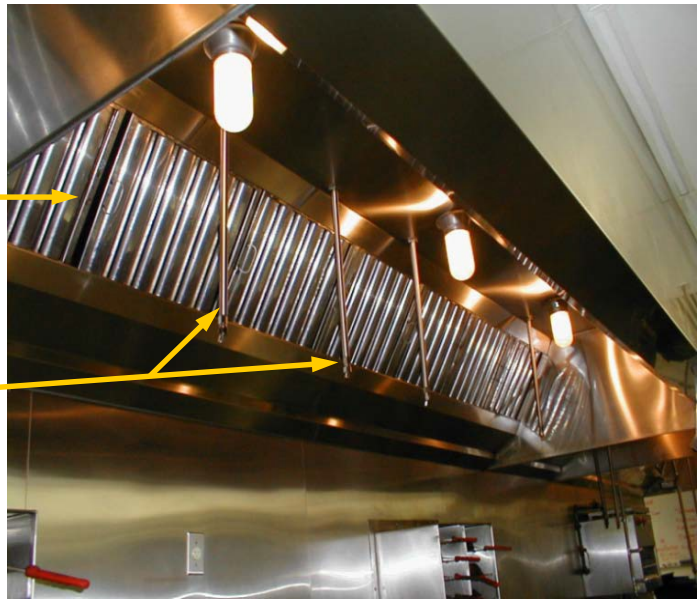

The National Fire Protection Association provides a resource for FOOD ESTABLISHMENTS to reduce the potential fire hazard of commercial cooking operations. Refer to the NFPA link below or your local/State Fire Protection regulations.

http://www.nfpa.org/codes-and-standards/document-information-pages?mode=code&code=96

Type II hoods shall be installed over EQUIPMENT that produce steam, heat, mists, condensation, fumes, vapors, and non-grease laden FOODs.

Type II Hood over WAREWASHING Machine

Vapor hood

Vent less Hood Systems or ventilation systems integral to the cooking EQUIPMENT need to be reviewed and APPROVED by the local mechanical code, and other applicable fire safety codes.

Appendix A - MODEL PLAN REVIEW APPLICATION FOR FOOD ESTABLISHMENTS

TYPE OF APPLICATION: ☐ New ☐ Remodel ☐ Conversion	**Projected Start Date:**_____ **Projected Completion Date:** _____

TYPE OF FOOD OPERATION: ☐ Restaurant ☐ Institution ☐ Daycare ☐ Retail food store ☐ Other:_____

FOOD ESTABLISHMENT INFORMATION			
Name of Establishment:			
Establishment Address:	**City:**	**State:**	**ZIP:**

OWNERSHIP INFORMATION			
Name of Owner:			
Address:	**City:**	**State:**	**ZIP:**
Email:	**Phone Number:**		

APPLICANT INFORMATION (e.g., ARCHITECT/ENGINEER)			
Applicant Name:	**Contact Person:**		
Applicant Mailing Address:	**City:**	**State:**	**ZIP:**
Email:	**Phone Number:**		

FOOD OPERATION INFORMATION			
Hours/Days of Operation ☐ **Sun:**_____ ☐ **Mon:**_____ ☐ **Tues:**_____ ☐ **Wed:**_____ ☐ **Thurs:**_____ ☐ **Fri:**_____ ☐ **Sat:**_____	**Restaurant Seating Capacity** # of Indoor Seats: _____ # of Outdoor Seats:_____ Square Feet of Facility: _____	**Type of Service (check all that apply)** ☐ On-site consumption ☐ Off-site consumption ☐ Catering ☐ Single-use utensils ☐ Multi-use utensils ☐ Other:_____	**Employees** Max per shift:_____ **Maximum meals to be served** ☐ Breakfast _____ ☐ Lunch _____ ☐ Dinner _____

The following documents must be submitted along with this application:

☐ Proposed menu or complete list of food and beverages to be offered (including seasonal, catering and banquet menus) – ***Standard Operating Procedures or HACCP plans may be required.***

☐ Plans must be clearly drawn to scale (minimum 11 x 14 inches in size) and include these items below:

- The floor plan must identify: food preparation, serving and seating areas, restrooms, office, employee change room, storage, warewashing, janitorial and trash area. Include location of any outside equipment or facilities (dumpsters, well, septic system-if applicable).
- Provide equipment layout and specifications, clearly numbered and cross-keyed with the equipment list. *Elevation drawings may be requested by the Regulatory Authority.*
- Identify handwashing, warewashing and food preparation sinks.
- Provide plumbing layout showing the sewer lines, cleanouts, floor drains, floor sinks, vents, grease trap or grease interceptor, hot and cold water lines, and direction of flow to sanitary sewer.
- Provide exhaust ventilation layout including location of hood and make-up air returns and ducts, if applicable.
- Lighting plan, indicating the exact foot candles for each area as required by the FDA Food Code (§6-303.11).
- Finish schedule showing floor, coved base, wall and ceilings for each area shown on the plans.

Note: A color coded flow chart may be requested by the Regulatory Authority demonstrating flow patterns for: food (receiving, storage, preparation, service); dishes (clean, soiled, cleaning, storage); trash (service area, holding, storage, disposal).

Signature:	**Date:**
Print Name:	**Title:**

Appendix B – REGULATORY COMPLIANCE REVIEW LIST
FOOD PREPARATION PROCEDURES

FOOD DELIVERY

1. How often will frozen foods be delivered? □ Daily □ Weekly □ Other: _____
2. How often will refrigerated foods be delivered? □ Daily □ Weekly □ Other: _____
3. How often will dry foods or supplies be delivered? □ Daily □ Weekly □ Other: _____

FOOD STORAGE* - Identify amount of space (in cubic feet) allocated for:

Dry Storage _____; Refrigerated Storage (41°F) _____; Frozen Storage _____; Utensil Storage _____

* Identify on plans where storage will be located.

INSTRUCTIONS: Describe the following with as much detail as possible. Indicate Not Applicable (NA) as appropriate.

PROCESS	IDENTIFY FOOD ITEMS	INDICATE LOCATION AND EQUIPMENT	MEETS CRITERIA (RA to circle and Initial)
Washing FDA Food Code §3-302.15			YES/NO
Thawing FDA Food Code §3-501.13			YES/NO
Cooking FDA Food Code §3-401			YES/NO
Hot Holding Hot food maintained at 135°F			YES/NO
Cooling Time/Temperature Control for Safety food will be cooled to 41°F within 6 hours; 135°F to			YES/NO
Reheating Food must be reheated to a temperature of 165° for 15 seconds within 2 hours			YES/NO

FINISH SCHEDULE

INSTRUCTIONS: Indicate which materials (quarry tile, stainless steel, fiberglass reinforced panels (RFP), ceramic tile, 4" plastic coved molding, etc.). Indicate Not Applicable (NA) as appropriate.

ROOM/AREA	FLOOR	FLOOR/WALL JUNCTURE	WALLS	CEILING	MEETS CRITERIA (RA to circle and Initial)
Food Preparation					YES/NO
Dry Food Storage					YES/NO
Warewashing Area					YES/NO
Walk-in Refrigerators and Freezers					YES/NO
Service Sink					YES/NO
Refuse Area					YES/NO
Toilet Rooms and Dressing Rooms					YES/NO
Other: Indicate					YES/NO
Identify the finishes of cabinets, countertops, and shelving:					

PHYSICAL FACILITIES

INSTRUCTIONS: Explain the following with as much detail as possible. Indicate Not Applicable (NA) as appropriate.

TOPIC	MINIMUM CRITERIA	MEETS CRITERIA Circle and Initial)
Handwashing facilities	• Identify number of the handwashing sinks in food preparation and warewashing areas: _____Food Preparation _____ Warewashing Area • Type of hand drying device? Disposable towels □ Hand-drying device □	YES/NO
Warewashing Facilities	**MANUAL DISHWASHING** • Identify the length, width, and depth of the compartments of the 3-compartment sink: _____ • Will the largest pot/ pan fit into each compartment of the 3-compartment sink? □ Yes □ No If No, what will be the procedure for manual cleaning and sanitizing of items that will not fit into sink compartments? _____ • Describe size, location and type (drainboards, wall-mounted or overhead shelves, stationary or portable racks) of air drying space: _____ • What type of sanitizer will be used? □ Chemical Type:_____ □ Hot Water **MECHANICAL DISHWASHING** • Identify the make and model of the mechanical dishwasher:_____ • What type of sanitizer will be used? □ Chemical Type:_____ □ Hot Water • Will ventilation be provided? Yes □ No □	YES/NO
Water Supply	• Is the water supply public or non-public/private? public □ non-public/private □ o If private, has source been approved? Yes □* No □ o Attach copy of written approval and/or permit. • Is ice made on premises or purchased commercially? Made on-site □ Purchased □ • Will there be an ice bagging operation? Yes □ No □	YES/NO

Sewage Disposal	• Is the sewage system public or non-public/private? public □ non-public/private □ If private, has the sewage system been approved? Yes □* No □ Attach copy of written approval and/or permit. • Will grease traps/interceptors be provided? Yes □* No □ *Identify location on plan.	YES/NO
Backflow Prevention	• Will all potable water sources be protected for backflow? Yes □ No □ • Are all floor drains identified on the submit floor plan? Yes □ No □	YES/NO
Toilet Facilities	• Identify locations and number of toilet facilities: _____ • Hot and cold water provided? Yes □ No □	YES/NO
Dressing Rooms	• Will dressing rooms be provided? Yes □ No □ • Describe storage facilities for employee personal belongings_____	YES/NO
Linens	• Will linens be laundered on site? Yes □ No □ If yes, what will be laundered and where? _____ If no, how and where will linens be cleaned? _____ • Identify location of clean and dirty linen storage:_____ • How often will linens be delivered and picked up?	YES/NO
Poisonous/Cleaning Storage	• Identify the location and storage of poisonous or toxic materials • Where will cleaning and sanitizing solutions be stored at workstations? _____ • How will these items be separated from food and food-contact surfaces? _____	YES/NO

Pest Control	• Will all outside doors be self-closing and rodent proof? □ Yes □ No □ NA • Will screens be provided on all entrances left open to the outside? □ Yes □ No □ NA • Will all openable windows have a minimum #16 mesh screening? □ Yes □ No □ NA • Will insect control devices be used? □ Yes □ No □ NA • Will air curtains be used? If yes, where? _____ Note: All pipes and electrical conduit chases must be sealed to prevent rodent access.	YES/NO
Refuse, Recyclables, and Returnables	• Will refuse/garbage be stored inside? □ Yes □ No If yes, where _____ • Identify how and where garbage cans and floor mats will be cleaned? _____ • Will a dumpster or a compacter be used? □ Dumpster □ Compactor • Identify locations of grease storage containers:_____ • Will there be an area to store recyclables? □ Yes □ No If yes, where _____ • Will there be an area to store returnable damaged goods? □ Yes □ No If yes, where _____	YES/NO

PLAN REVIEW FORMULAS

WALK-IN REFRIGERATED STORAGE

$$\text{Estimated Space Needed (Cu. ft.)} = \frac{\text{Volume per Meal [Cu. ft.]} \times \text{Number Meals Served between Deliveries}}{0.40}$$

NOTE: Only 40% of any walk-in unit actually provides usable space

$$\frac{\text{Estimated Space (Cu. ft.)}}{\text{Height of Cooler (ft.)}} = \text{Size of Cooler Needed (Sq. ft.)}$$

Examples:

1. The number of meals between deliveries = 1000 (100 meals per day X 10 days between deliveries). Volume per meal = 0.1 cubic feet.

$$0.1\ \text{ft}^3\ \text{vol.} \times 1000\ \text{meals} = 100\ \text{ft}^3$$

$$\frac{100\ \text{ft}^3}{0.40} = 250\ \text{ft}^3\ \text{Usable Space Needed}$$

2. The usable space needed for the walk-in is 250 cubic feet. The cooler has a 6 foot high ceiling.

$$\frac{250\ \text{ft}^3\ \text{usable space needed}}{6\ \text{ft ceiling height}} = 41\ \text{ft}^2\ \text{Sized Cooler Needed}$$

REACH IN REFRIGERATED STORAGE

$$\text{Estimated Space Needed (Cu. ft.)} = \frac{\text{Volume per Meal [Cu. ft.]} \times \text{Number Meals Served between Deliveries}}{0.75}$$

NOTE: Only 75% of any reach-in unit actually provides usable space

Example:

1. The number of meals between deliveries = 1000 (100 meals per day X 10 days between deliveries). Volume per meal = 0.1 cubic feet.

$$0.1\ \text{ft}^3\ \text{vol.} \times 1000\ \text{meals} = 100\ \text{ft}^3$$

$$\frac{100\ \text{ft}^3}{0.75} = 133.3\ \text{ft}^3\ \text{Estimated Space Needed}$$

PLAN REVIEW FORMULAS

HOT WATER DEMAND

$$\text{Gallons Per Hour (GPH)} =$$

$$\frac{\text{Sink Size in}^3 \times 7.5\ \text{gal/ft}^3 \times (\text{Number of compartments} \times 0.75\ \text{capacity})}{1728\ \text{in}^3/\text{ft}^3}$$

OR

$$\text{Sink Size in}^3 \times \text{Number components} \times 0.003255\ \text{in}^3$$

$$\text{British Thermal Units (BTU)} = \frac{\text{GPH} \times {}^\circ\text{Rise} \times 8.33\ \text{lb/gal of water}}{\text{Thermal Efficiency}}$$

$$\text{Kilo-Watt (KW) Input} = \frac{\text{GPH} \times {}^\circ\text{Rise} \times 8.33\ \text{lb/gal of water}}{3412\ \text{BTU per KW}}$$

Example:

1. How many BTU's or KW's will the booster heater need to raise the incoming hot water (140°F) to 180°F for the final rinse temperature if the dishwasher requires 64 GPH?

$$\frac{64\ \text{GPH} \times 40^\circ\text{F Rise} \times 8.33}{0.70\ \text{(operating efficiency)}} = 30{,}464\ \text{BTU}$$

$$\frac{64\ \text{GPH} \times 40^\circ\text{F Rise} \times 8.33}{3412\ \text{BTU per KW}} = 6.2\ \text{KW}$$

PLAN REVIEW FORMULAS

DRY STORAGE

$$\text{Required Storage Area (sq. ft)} = \frac{\text{Volume per Meal (0.1 cu. ft.)} \times \text{Number Meals between Deliveries}}{\text{Avg. Height of Area (ft.)} \times \text{Fraction of Usable Floor Area}}$$

Example: 7 ft. high ceiling, shelves 6" off the floor, 18" from ceiling
Usable Height 5 ft.

Usable Floor Space:
Depends on door swings, overhead sewer lines, electrical boxes, etc.

Examples:

1. The number of meals between deliveries = 1,000 (100 meals per day X 10 days between deliveries). A ***small fraction (3/10ths) of usable storage space*** in a store room that has 5 feet in usable height

$$\frac{0.1 \text{ cu. ft.} \times 1000 \text{ meals}}{5\text{ft} \times 0.3} = 66.67 \text{ ft}^2 \text{ Required Storage Area}$$

2. The number of meals between deliveries =1,000 (100 meals per day X 10 days between deliveries). A ***larger fraction (6/10ths) of usable storage space*** in a store room that has 5 feet in usable height

$$\frac{0.1 \text{ cu. ft.} \times 1000 \text{ meals}}{5\text{ft} \times 0.6} = 33 \text{ ft}^2 \text{ Required Storage Area}$$

LINEAR FEET OF SHELVING

$$\text{Linear Feet of Shelving Required (ft.)} = \frac{\text{Volume per Meal (0.1 cu. ft.)} \times \text{Number Meals between Deliveries}}{D \times H \times C}$$

D =Depth of Shelves (ft.)

H =Clearance bewteen shelves (ft.)

C =80% effective capacity of shelf height

Examples:

1. Assume 400 meals per day and a 10 day storage between deliveries = 4,000 meals.
   Volume of 0.1 cu. Ft. per meal, shelf depth of 18 inches, clearance of **12 inches** between shelves and 80% effective capacity of shelf height

$$\frac{0.1 \text{ cu. ft.} \times 4000 \text{ meals}}{1.5 \text{ ft.} \times 1 \text{ ft.} \times 0.80} = 333 \text{ ft. Shelving Needed}$$

2. Assume 400 meals per day and a 10 day storage between deliveries = 4,000 meals.
   Volume of 0.1 cu. Ft. per meal, shelf depth of 18 inches, clearance of **18 inches** between shelves and 80% effective capacity of shelf height

$$\frac{0.1 \text{ cu. ft.} \times 4000 \text{ meals}}{1.5 \text{ ft.} \times 1.5 \text{ ft.} \times 0.80} = 222 \text{ ft. Shelving Needed}$$

Appendix D Plan Review Web Links

These links are examples of resources available to the Food Establishment Applicant. The required plan, specifications and information must be approved by the Regulatory Authority to receive a permit to operate a food establishment.

Michigan Department of Agriculture and Rural Development

http://www.michigan.gov/mdard/0%2c4610%2c7-125-50772_45851-59764--%2c00.html

Wisconsin Department of Safety and Professional Services

http://www.dsps.wi.gov/Plan-Review

U.S. Food and Drug Administration Food Establishment Plan Review Guide

http://www.fda.gov/Food/GuidanceRegulation/RetailFoodProtection/IndustryandRegulatoryAssistanceandTrainingResources/ucm101639.htm

North Carolina Public Health, Environmental Health Section

http://ehs.ncpublichealth.com/faf/food/planreview/app.htm

Minnesota Department of Agriculture

http://www.mda.state.mn.us/food/business/plan-review.aspx

Conference for Food Protection, Plan Review for Food Establishments

http://www.foodprotect.org/guides-documents/plan-review-for-food-establishments-2008/

Public Health – Seattle and King County

http://www.kingcounty.gov/healthservices/health/ehs/foodsafety/FoodBusiness/permanent.aspx

Harris County Public Health and Environmental Services

http://www.hcphes.org/divisions_and_offices/environmental_public_health/training_and_resources/information_for_food_establishments/food_establishment/

Florida Department of Health in Volusia County

http://volusia.floridahealth.gov/programs-and-services/environmental-health/food-hygiene/food-guide.html