COMPREHENSIVE PERMIT FILING

Essex Pastures

36 Essex Road
Ipswich, Massachusetts 01938

Prepared for

Essex Pastures, LLC

LEGEND

FORCE MAIN	FM
SEWERLINE & MANHOLE	SS
DRAINLINE, MANHOLE & CATCH BASIN	SD
WATER MAIN	W
PROPERTY LINE	
BEARING & DISTANCE ALONG BOUNDARY	55.36' N120°46'23"E
FENCE	
GUARD RAIL	
RETAINING WALL	
EDGE OF PAVEMENT	
CURB	
BUILDING, LIGHT, STEPS & OVERHANG	
SPOT ELEVATION	× 93.3
ELEVATION CONTOUR	92
LIMIT OF BORDERING VEGETATED WETLAND	
LIMIT WETLAND BUFFER ZONE	

PROJECT TEAM

CIVIL ENGINEERS:

HANCOCK ASSOCIATES
185 CENTRE STREET
DANVERS, MASSACHUSETTS 01923

LAND SURVEYORS:

EASTERN LAND SURVEY ASSOCIATES, INC.
104 LOWELL STREET
PEABODY, MASSACHUSETTS 01960

LANDSCAPE ARCHITECTS:

JAMES K. EMMANUEL ASSOCIATES
22 CARLTON ROAD
MARBLEHEAD, MASSACHUSETTS 01945

ARCHITECTS:

THE MZO GROUP
201 MAIN STREET, SUITE 201
STONEHAM, MASSACHUSETTS 02180

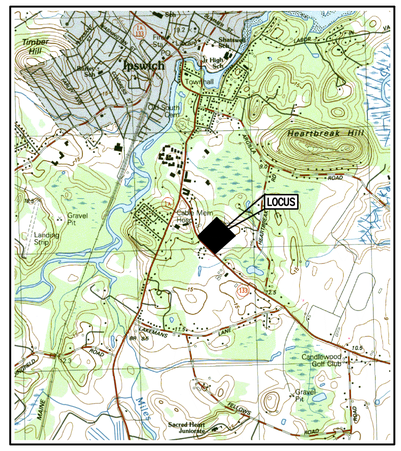

VICINITY MAP

SCALE: 1"=2000'

OWNER:

JOHN J. BRUNI,
TRUSTEE OF SOUTHERN CROSS REALTY TRUST
36 ESSEX ROAD
IPSWICH, MASSACHUSETTS 01938

APPLICANT:

ESSEX PASTURES, LLC
36 ESSEX ROAD
IPSWICH, MASSACHUSETTS 01938

SHEET INDEX

SHEET 1..... TITLE SHEET
SHEET 2..... EXISTING CONDITIONS PLAN (BY OTHERS)
SHEET 3..... LAYOUT & MATERIALS PLAN
SHEET 4..... GRADING AND UTILITIES PLAN
SHEETS 5 & 6..... SITE DETAILS

GENERAL NOTES

1. THE CONTRACTOR SHALL VERIFY THE LOCATION AND RELATIVE ELEVATION OF BENCH MARKS PRIOR TO COMMENCEMENT OF CONSTRUCTION. ANY DISCREPANCY SHALL BE REPORTED TO THE ENGINEER.
2. CONTRACTOR SHALL FURNISH CONSTRUCTION LAYOUT OF BUILDING AND SITE IMPROVEMENTS. THIS WORK SHALL BE PERFORMED BY A PROFESSIONAL LAND SURVEYOR.
3. SAFETY MEASURES, CONSTRUCTION METHODS AND CONTROL OF WORK SHALL BE RESPONSIBILITY OF THE CONTRACTOR.
4. ALL SITE CONSTRUCTION SHALL COMPLY WITH THE IPSWICH DEPARTMENT OF PUBLIC WORK STANDARDS.
5. CONTRACTOR SHALL BE RESPONSIBLE FOR REPAIR AND/OR REPLACEMENT OF ANY EXISTING IMPROVEMENTS DAMAGED DURING CONSTRUCTION THAT ARE NOT DESIGNATED FOR DEMOLITION AND / OR REMOVAL HEREON. DAMAGED IMPROVEMENTS SHALL BE REPAIRED TO THE SATISFACTION OF THEIR RESPECTIVE OWNERS.
6. ANY INTENDED REVISION OF THE HORIZONTAL AND/OR VERTICAL LOCATION OF IMPROVEMENTS TO BE CONSTRUCTED AS SHOWN HEREON SHALL BE REVIEWED AND APPROVED BY ENGINEER PRIOR TO IMPLEMENTATION.
7. THIS PLAN IS NOT INTENDED TO SHOW AN ENGINEERED BUILDING FOUNDATION DESIGN, WHICH WOULD INCLUDE DETAILS AND FINAL ELEVATIONS OF FOOTINGS, WALLS AND SUBSURFACE DRAINAGE TO PREVENT INTERIOR FLOODING. SEE ARCHITECTURAL AND/OR STRUCTURAL DRAWINGS.
8. PROPOSED BUILDING FOUNDATION CONFIGURATION AND LOCATION ON THE LOT AS SHOWN ARE CONCEPTUAL AND SHALL BE VERIFIED AS TO CONFORMANCE WITH FINAL ARCHITECTURAL PLANS AND ZONING ORDINANCES PRIOR TO CONSTRUCTION.
9. THE CONTRACTOR SHALL BE RESPONSIBLE FOR RECORDING HORIZONTAL AND VERTICAL MEASUREMENTS FOR ALL SUBSURFACE STRUCTURES. THIS INFORMATION SHALL BE REPORTED TO THE ENGINEER.
10. STANDARD PARKING SPACES ARE 8.5' X 17'. TYPICAL SITE DRIVEWAYS ARE 22' WIDE. HANDICAP PARKING SPACES AND RAMPS SHALL MEET ADA AND MASSDOT REQUIREMENTS.

REGULATORY NOTES

1. CONTRACTOR SHALL CONTACT "DIG-SAFE" FOR AN UNDERGROUND UTILITY MARKING AT 811 AT LEAST 72 HOURS PRIOR TO THE COMMENCEMENT OF ANY WORK.
2. CONTRACTOR SHALL MAKE THEMSELVES AWARE OF ALL CONSTRUCTION REQUIREMENTS, CONDITIONS AND LIMITATIONS IMPOSED BY PERMITS AND APPROVALS ISSUED BY REGULATORY AUTHORITIES PRIOR TO THE COMMENCEMENT OF ANY WORK. CONTRACTOR SHALL COORDINATE AND OBTAIN ALL CONSTRUCTION PERMITS REQUIRED BY REGULATORY AUTHORITIES.
3. ALL WORK OUTSIDE OF THE BUILDING THAT IS LESS THAN 10 FEET FROM THE INSIDE FACE OF THE BUILDING FOUNDATION SHALL CONFORM WITH THE UNIFORM STATE PLUMBING CODE OF MASSACHUSETTS, 248 CMR 2.00.
4. CONSTRUCTION ACTIVITIES SHALL CONFORM TO THE RULES AND REGULATIONS OF THE OCCUPATIONAL SAFETY AND HEALTH ADMINISTRATION (OSHA).
5. CONTRACTOR SHALL INSTALL ALL PARKING AREAS AND WALKWAYS IN ACCORDANCE WITH APPLICABLE ADA AND MAAB REQUIREMENTS, INCLUDING BUT NOT LIMITED TO THE FOLLOWING:
   - HANDICAPPED SPACES AND STRIPED AREA SLOPES SHALL NOT EXCEED 2% IN ANY DIRECTION.
   - HANDICAPPED RAMPS SHALL NOT EXCEED 8% FOR A MAXIMUM VERTICAL DISTANCE OF 6 INCHES.
   - SIDEWALKS SHALL HAVE A MAXIMUM SLOPE IN THE PATH OF TRAVEL OF 5% AND A MAXIMUM CROSS SLOPE OF 2%. CONTRACTOR SHOULD NOT LAYOUT SLOPES EXCEEDING 4.5% AND 1.5% RESPECTIVELY TO ALLOW FOR CONSTRUCTION TOLERANCES. IF THE CONTRACTOR DETERMINES THAT THE REQUIRED SLOPES CANNOT BE ACHIEVED, THE CONTRACTOR SHALL BE RESPONSIBLE FOR REPORTING THE INFORMATION TO THE ENGINEER FOR RESOLUTION.

PRELIMINARY SITE PLAN

36 Essex Road
Ipswich, Massachusetts 01938

ASSESSORS:

PARCEL ID
54C 022 0

PREPARED FOR:

Essex Pastures, LLC

36 Essex Road
Ipswich, Massachusetts 01938

HANCOCK ASSOCIATES

Civil Engineers

Land Surveyors

Wetland Scientists

185 CENTRE STREET, DANVERS, MA 01923
VOICE (978) 777-3050, FAX (978) 774-7816
WWW.HANCOCKASSOCIATES.COM

NO.	BY	APP	DATE	ISSUE/REVISION DESCRIPTION
1	JJP	ESS	7/15/20	REVISED CENTRAL GREEN AREA

DATE:	6/1/20	DESIGN BY:	ESS/JJP
		DRAWN BY:	JJP
APPRVD. BY:	ESS	CHECK BY:	ESS

TITLE SHEET

PLOT DATE: Aug 14, 2020 9:25 am
PATH: F:\Civil 3D Projects\23069 Bruni - Ipswich\DWG\

DWG: 23069title.dwg
LAYOUT: TS
SHEET: 1 OF 6

1

PROJECT NO.: 23069

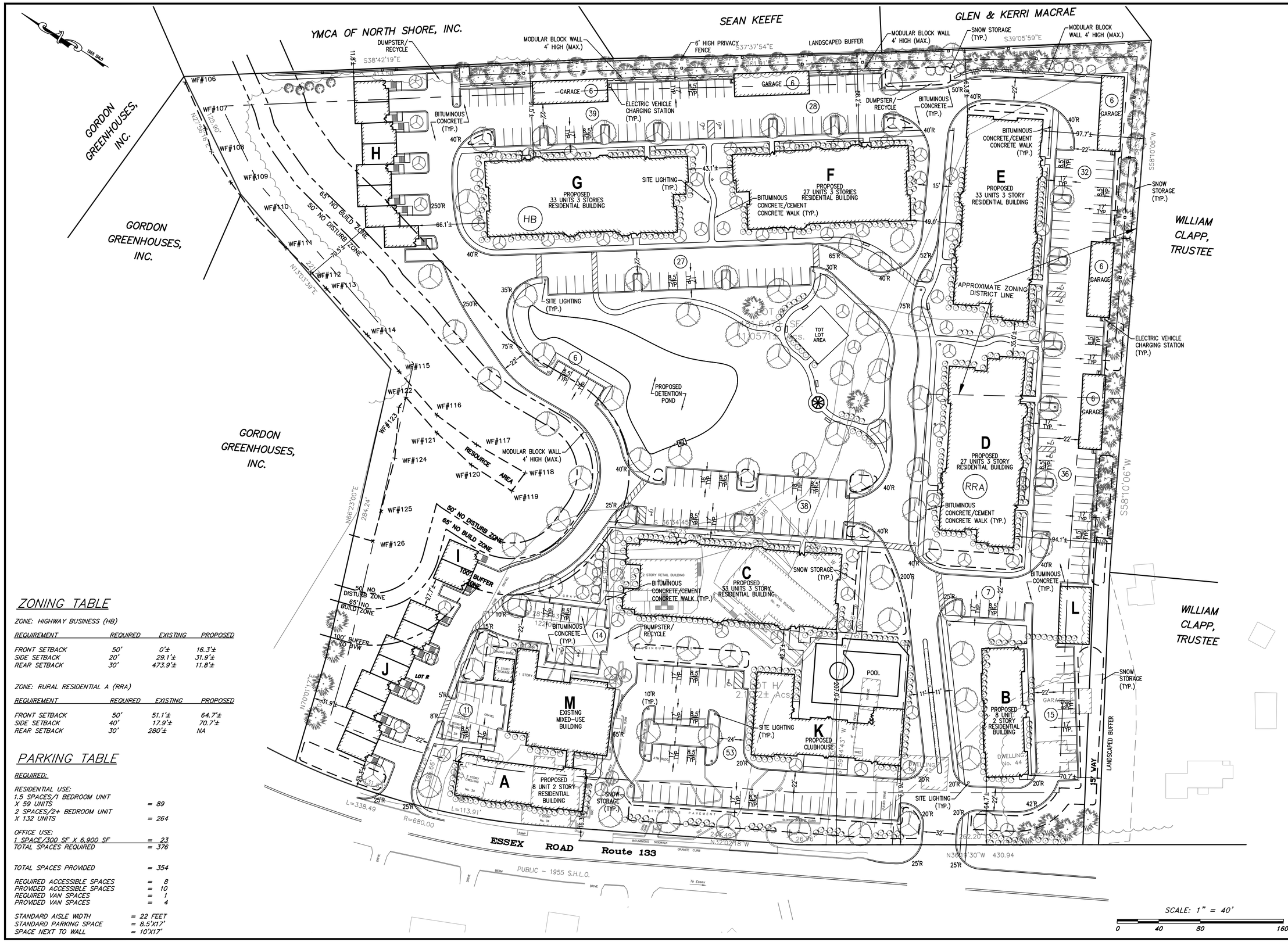

ZONING TABLE

ZONE: HIGHWAY BUSINESS (HB)

REQUIREMENT	REQUIRED	EXISTING	PROPOSED
FRONT SETBACK	50'	0'±	16.3'±
SIDE SETBACK	20'	29.1'±	31.9'±
REAR SETBACK	30'	473.9'±	11.8'±

ZONE: RURAL RESIDENTIAL A (RRA)

REQUIREMENT	REQUIRED	EXISTING	PROPOSED
FRONT SETBACK	50'	51.1'±	64.7'±
SIDE SETBACK	40'	17.9'±	70.7'±
REAR SETBACK	30'	280'±	NA

PARKING TABLE

REQUIRED:

RESIDENTIAL USE:
1.5 SPACES/1 BEDROOM UNIT X 59 UNITS = 89
2 SPACES/2+ BEDROOM UNIT X 132 UNITS = 264

OFFICE USE:
1 SPACE/300 SF X 6,900 SF = 23
TOTAL SPACES REQUIRED = 376

TOTAL SPACES PROVIDED = 354

REQUIRED ACCESSIBLE SPACES = 8
PROVIDED ACCESSIBLE SPACES = 10
REQUIRED VAN SPACES = 1
PROVIDED VAN SPACES = 4

STANDARD AISLE WIDTH = 22 FEET
STANDARD PARKING SPACE = 8.5'X17'
SPACE NEXT TO WALL = 10'X17'

PRELIMINARY SITE PLAN

36 Essex Road
Ipswich, Massachusetts 01938

ASSESSORS:

PARCEL ID
54C 022 0

PREPARED FOR:

Essex Pastures, LLC

36 Essex Road
Ipswich, Massachusetts 01938

HANCOCK ASSOCIATES

Civil Engineers

Land Surveyors

Wetland Scientists

185 CENTRE STREET, DANVERS, MA 01923
VOICE (978) 777-3050, FAX (978) 774-7816
WWW.HANCOCKASSOCIATES.COM

NO.	BY	APP	DATE	ISSUE/REVISION DESCRIPTION
2	MJA	ESS	8/4/20	REVISED BUILDING B PARKING
1	JJP	ESS	7/15/20	REVISED CENTRAL GREEN AREA

DATE:	6/1/20	DESIGN BY:	ESS/JJP
SCALE:	1" = 40'	DRAWN BY:	JJP
APPRVD. BY:	ESS	CHECK BY:	ESS

LAYOUT & MATERIALS PLAN OF LAND IN IPSWICH, MA

PLOT DATE: Aug 14, 2020 9:23 am
PATH: F:\Civil 3D Projects\23069 Brunl – Ipswich\DWG\

DWG: 23069lm.dwg
LAYOUT: LM
SHEET: 3 OF 6

3

PROJECT NO.: 23069

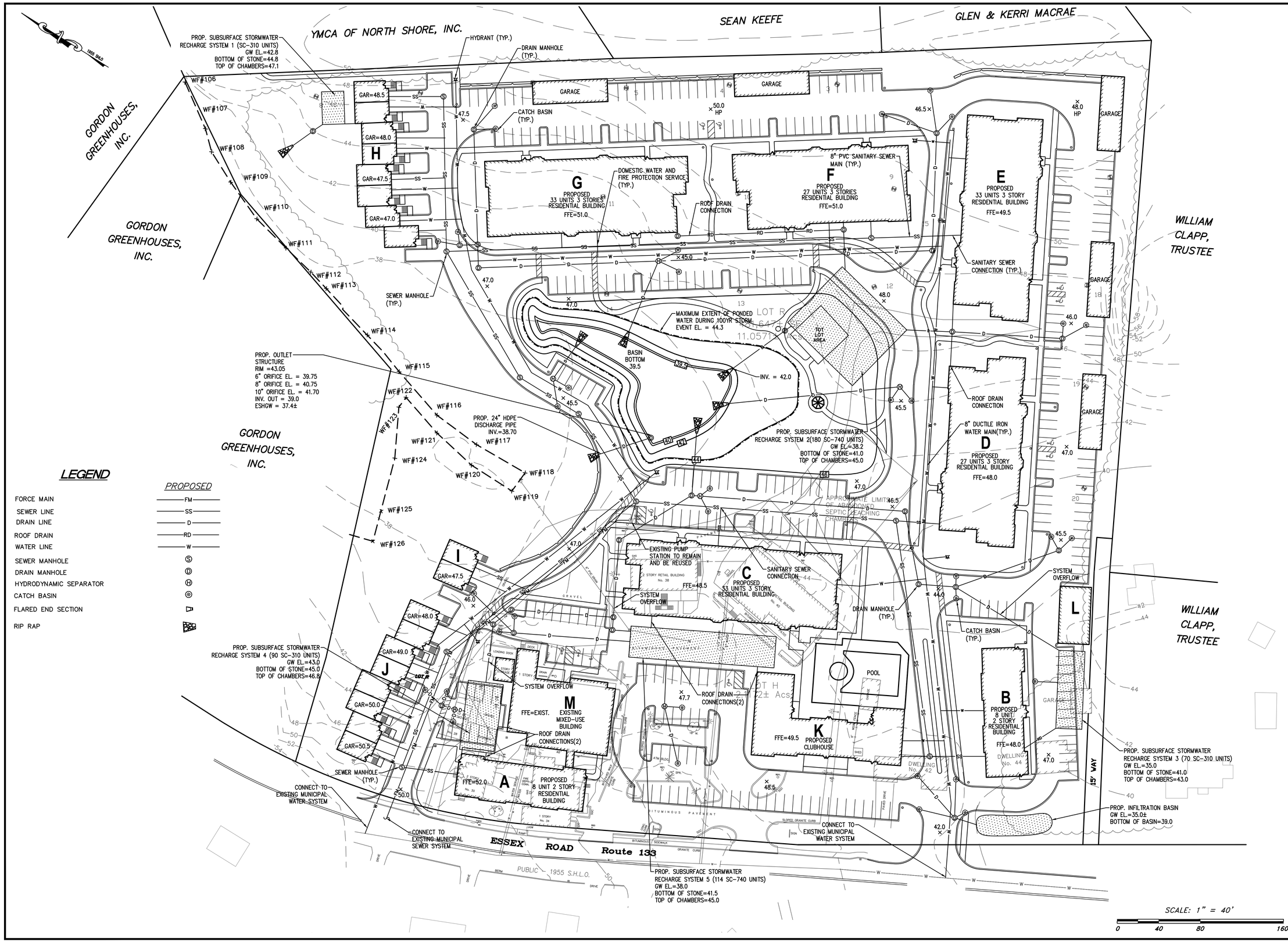

LEGEND

	PROPOSED
FORCE MAIN	FM
SEWER LINE	SS
DRAIN LINE	D
ROOF DRAIN	RD
WATER LINE	W
SEWER MANHOLE	Ⓢ
DRAIN MANHOLE	Ⓓ
HYDRODYNAMIC SEPARATOR	Ⓗ
CATCH BASIN	◎
FLARED END SECTION	
RIP RAP	

PRELIMINARY SITE PLAN

36 Essex Road
Ipswich, Massachusetts 01938

ASSESSORS:

PARCEL ID
54C 022 0

PREPARED FOR:

Essex Pastures, LLC

36 Essex Road
Ipswich, Massachusetts 01938

HANCOCK ASSOCIATES

Civil Engineers

Land Surveyors

Wetland Scientists

185 CENTRE STREET, DANVERS, MA 01923
VOICE (978) 777-3050, FAX (978) 774-7816
WWW.HANCOCKASSOCIATES.COM

NO.	BY	APP	DATE	ISSUE/REVISION DESCRIPTION
2	ESS	JP	8/3/20	ADJUSTED UTILITIES/DRAINAGE
1	JJP	ESS	7/15/20	REVISED CENTRAL GREEN AREA

DATE:	6/1/20	DESIGN BY:	ESS/JJP
SCALE:	1" = 40'	DRAWN BY:	JJP
APPRVD. BY:	ESS	CHECK BY:	ESS

GRADING & UTILITIES PLAN OF LAND IN IPSWICH, MA

PLOT DATE: Aug 14, 2020 9:20 am
PATH: F:\Civil 3D Projects\23069 Bruni - Ipswich\DWG\

DWG: 23069gu.dwg
LAYOUT: GU
SHEET: 4 OF 6

4

PROJECT NO.: 23069

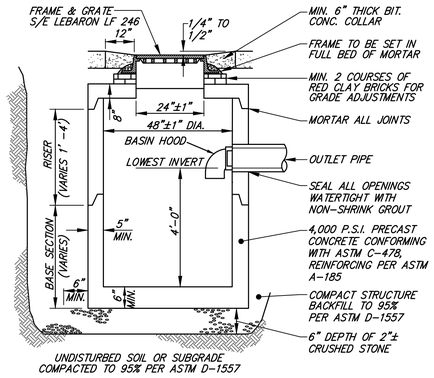

NOTE: CONICAL TOP MAY ALSO BE USED.

CATCH BASIN WITH HOOD

TYPICAL CROSS SECTION
NOT TO SCALE

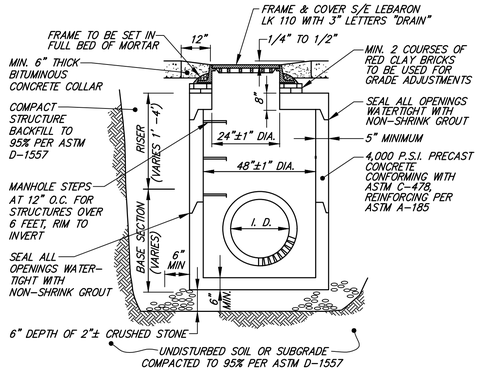

NOTE: CONICAL TOP MAY ALSO BE USED

DRAIN MANHOLE

TYPICAL CROSS SECTION
NOT TO SCALE

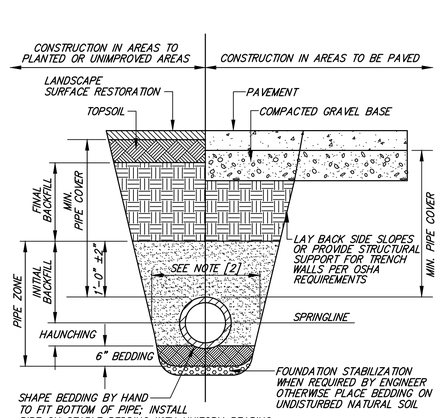

FOUNDATION, BEDDING, & BACKFILL MATERIALS		
PIPE MATERIAL	HDP, PVC	RC, DI
FOUNDATION STABILIZATION	[6]	[6]
BEDDING	[1]	[1]
HAUNCHING	[1]	[1]
INITIAL BACKFILL	[1]	[1]
FINAL BACKFILL	[4]	[4]
MIN. PIPE COVER	[5]	[5]

NOTES:

[1] PLACE 3/4"± GRADED GRANULAR BACKFILL AT OPTIMUM MOISTURE IN HORIZONTAL, 8"-DEEP, LOOSE LAYERS; COMPACT TO 95% PER ASTM D-1557.

[2] MINIMUM WIDTH OF TRENCH MEASURED AT THE SPRINGLINE OF THE PIPE, INCLUDING ANY NECESSARY SHEATHING:

PIPE I.D.	WIDTH
LESS THAN 21"	O.D. + 12"
21" TO 42"	O.D. + 24"
GREATER THAN 42"	O.D. + 30"

[3] INSTALL PIPE IN CENTER OF TRENCH.

[4] IN PLANTED OR UNIMPROVED AREAS, USE ON-SITE EXCAVATED MATERIAL FOR FINAL BACKFILL. COMPACT TO 95% PER ASTM D-1557. IN PAVED AREAS, OBTAIN ENGINEER APROVAL OF ON-SITE EXCAVATED MATERIALS FOR USE AS FINAL BACKFILL.

[5] MINIMUM COVER OVER TOP OF PIPE:

PIPE MATERIAL	HDP, PVC	RC, DI
WATER	5'-0"	5'-0"
SEWER	4'-0"	4'-0"
DRAIN	1'-6"	1'-0"

[6] FOR FOUNDATION STABILIZATION, USE 2"± CRUSHED STONE.

PIPE TRENCH

TYPICAL CROSS SECTION
NOT TO SCALE

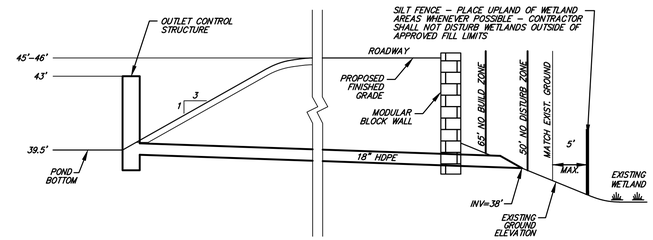

SECTION THROUGH RETENTION/DETENTION FACILITY

DETENTION BASIN

TYPICAL CROSS SECTION
NOT TO SCALE

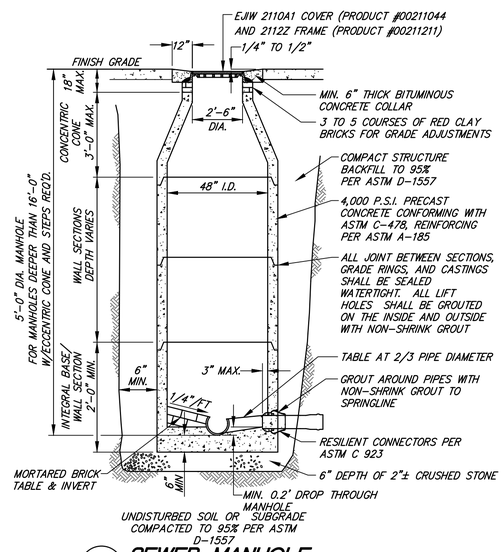

SEWER MANHOLE

TYPICAL CROSS SECTION
NOT TO SCALE

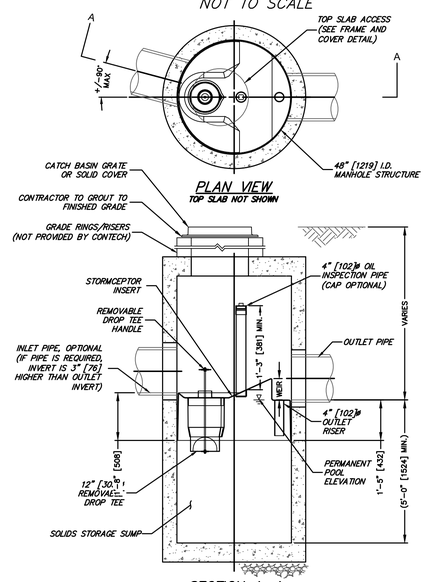

STORMCEPTOR 450i

NOT TO SCALE

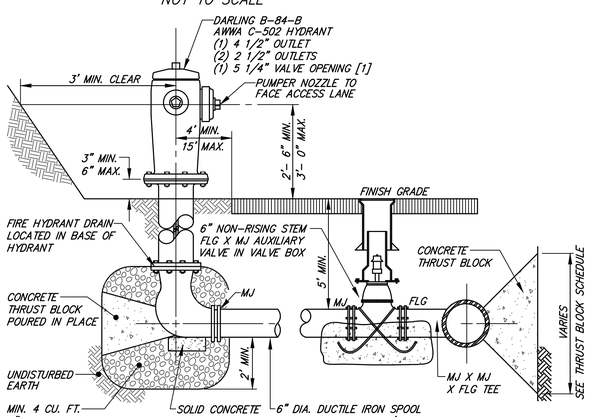

FIRE HYDRANT ASSEMBLY

TYPICAL CROSS SECTION
NOT TO SCALE

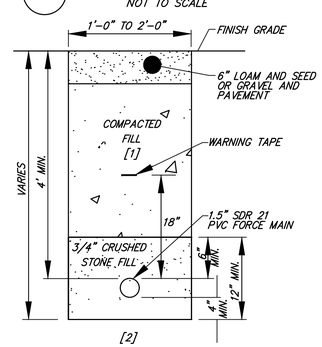

[1] WHERE UNDER OR ADJACENT AREA TO BE PAVED, COMPACT BACKFILL TO 95% PER ASTM D-1557.

[2] UNDISTURBED SOIL OR SUBGRADE COMPACTED TO 95% PER ASTM D-1557.

FORCE MAIN TRENCH

TYPICAL CROSS SECTION
NOT TO SCALE

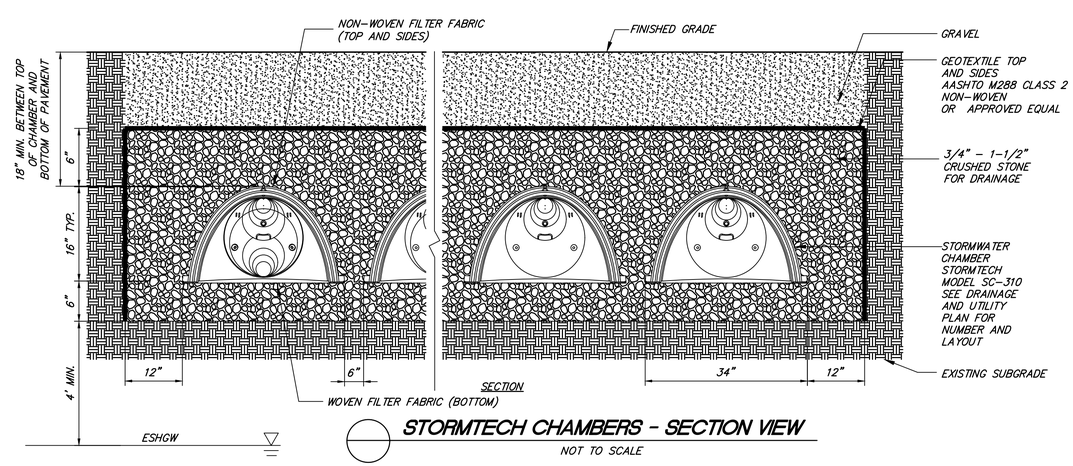

STORMTECH CHAMBERS - SECTION VIEW

NOT TO SCALE

PRELIMINARY SITE PLAN

36 Essex Road
Ipswich, Massachusetts 01938

ASSESSORS:

PARCEL ID
54C 022 0

PREPARED FOR:

Essex Pastures, LLC

36 Essex Road
Ipswich, Massachusetts 01938

HANCOCK ASSOCIATES

Civil Engineers

Land Surveyors

Wetland Scientists

185 CENTRE STREET, DANVERS, MA 01923
VOICE (978) 777-3050, FAX (978) 774-7816
WWW.HANCOCKASSOCIATES.COM

NO.	BY	APP	DATE	ISSUE/REVISION DESCRIPTION
2	ESS	JP	8/3/20	NO CHANGES
1	JJP	ESS	7/15/20	REVISED CENTRAL GREEN AREA

DATE:	6/1/20	DESIGN BY:	ESS/JJP
SCALE:	1" = 40'	DRAWN BY:	JJP
APPRVD. BY:	ESS	CHECK BY:	ESS

SITE DETAILS

PLOT DATE: Aug 14, 2020 9:21 am
PATH: F:\Civil 3D Projects\23069 Bruni - Ipswich\DWG\

DWG: 23069det.dwg
LAYOUT: DET
SHEET: 5 OF 6

5

PROJECT NO.: 23069

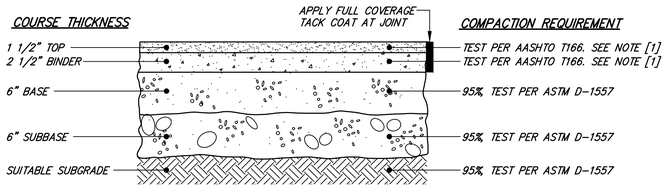

NOTES:
[1] COMPACT TO TEST AVERAGE OF 95% ±2.5%

MATERIAL	SPECIFICATION	MAXIMUM AGGREGATE OR PARTICLE SIZE (IN.)
TOP – BITUMINOUS CONCRETE	MHD M3.11.03 CLASS I, TYPE I-1	1/2
BINDER– BITUMINOUS CONCRETE	MHD M3.11.03 CLASS I, TYPE I-1	1
BASE – DENSE GRADED CRUSHED STONE	MHD M2.01.7	1 1/2
SUBBASE – GRAVEL BORROW	MHD M1.03.0 TYPE C	2

BITUMINOUS CONCRETE PAVEMENT
TYPICAL CROSS SECTION
NOT TO SCALE

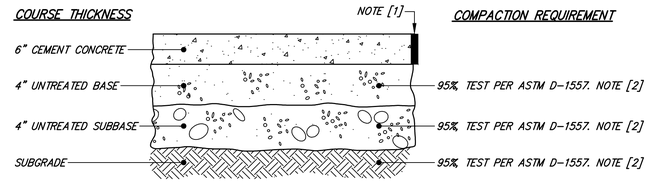

NOTES:
[1] CONTROL JOINT EVERY 10 FEET, EXPANSION JOINT EVERY 50 FEET.
[2] COMPACT TO TEST AVERAGE OF 95% NO TEST LOWER THAN 93%

MATERIAL	SPECIFICATION	MAXIMUM AGGREGATE OR PARTICLE SIZE (IN.)
TOP – CEMENT CONCRETE	MHD M4.02.00 4000 PSI AT 28 DAYS	3/4
BASE – SAND BORROW	MHD M1.04.0 TYPE b	3/8
SUBBASE – GRAVEL BORROW	MHD M1.03.0 TYPE c	2
UNSUITABLE SUBGRADE – ORDINARY BORROW	MHD M1.01.0	12

CEMENT CONCRETE PAVEMENT
TYPICAL CROSS SECTION
NOT TO SCALE

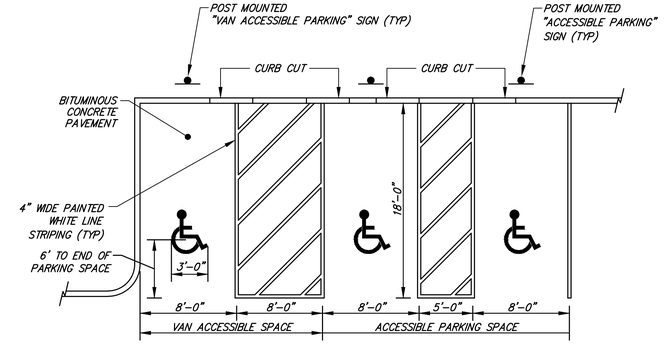

NOTES:
1. MAXIMUM SLOPE 2% IN ANY DIRECTION.
2. LOCATE SIGN WITHIN 10 FT OF ACCESSIBLE SPACE.
3. PROVIDE AN ACCESSIBLE CURB CUT AT EACH ACCESS AISLE BETWEEN ACCESSIBLE SPACES.

ACCESSIBLE PARKING STALL DETAIL
NOT TO SCALE

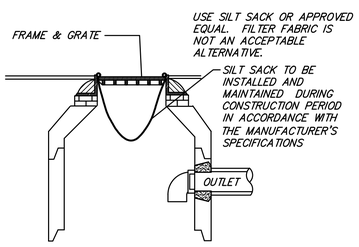

CATCH BASIN SILT SACK
TYPICAL CROSS SECTION
NOT TO SCALE

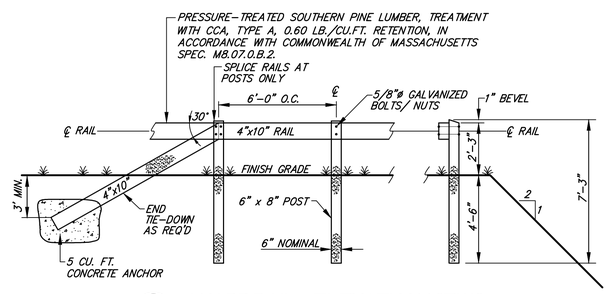

GUARDRAIL- ELEVATION VIEWS
NOT TO SCALE

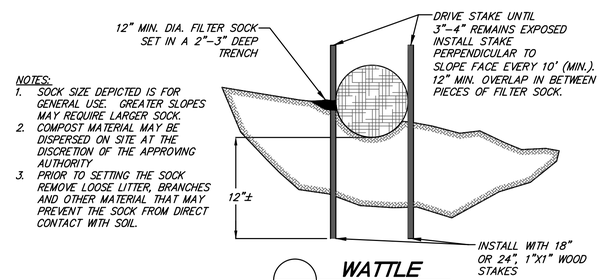

NOTES:
1. SOCK SIZE DEPICTED IS FOR GENERAL USE. GREATER SLOPES MAY REQUIRE LARGER SOCK.
2. COMPOST MATERIAL MAY BE DISPERSED ON SITE AT THE DISCRETION OF THE APPROVING AUTHORITY
3. PRIOR TO SETTING THE SOCK REMOVE LOOSE LITTER, BRANCHES AND OTHER MATERIAL THAT MAY PREVENT THE SOCK FROM DIRECT CONTACT WITH SOIL.

WATTLE
NOT TO SCALE

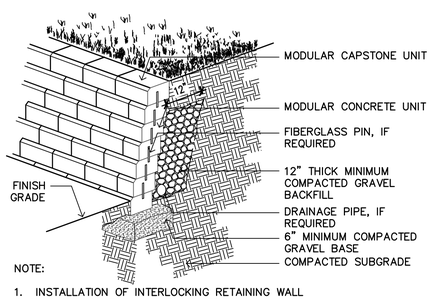

NOTE:
1. INSTALLATION OF INTERLOCKING RETAINING WALL SHOULD FOLLOW THE MANUFACTURER'S RECOMMENDATIONS AS SUITED TO EXISTING SITE CONDITIONS

MODULAR-BLOCK RETAINING WALL
NOT TO SCALE

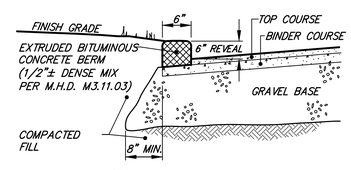

BITUMINOUS BERM
CROSS SECTION
NOT TO SCALE

PRELIMINARY SITE PLAN

36 Essex Road
Ipswich, Massachusetts 01938

ASSESSORS:
PARCEL ID
54C 022 0

PREPARED FOR:
Essex Pastures, LLC

36 Essex Road
Ipswich, Massachusetts 01938

HANCOCK ASSOCIATES
Civil Engineers
Land Surveyors
Wetland Scientists
185 CENTRE STREET, DANVERS, MA 01923
VOICE (978) 777-3050, FAX (978) 774-7816
WWW.HANCOCKASSOCIATES.COM

NO.	BY	APP	DATE	ISSUE/REVISION DESCRIPTION
1	JJP	ESS	7/15/20	REVISED CENTRAL GREEN AREA

DATE:	6/1/20	DESIGN BY:	ESS/JJP
SCALE:	1" = 40'	DRAWN BY:	JJP
APPRVD. BY:	ESS	CHECK BY:	ESS

SITE DETAILS

PLOT DATE: Aug 14, 2020 9:22 am
PATH: F:\Civil 3D Projects\23069 Brunl - Ipswich\DWG\

DWG: 23069det.dwg
LAYOUT: DET (2)
SHEET: 6 OF 6

6

PROJECT NO.: 23069